PIPESTEC

Pipeline Products Specialists

Industry products solutions for a worldwide

Products

Pipe
Flange
Butt Welding Pipe Fittings
Forged Pipe Fittings
Fasteners
Valves
Accessaries

PIPESTEC INDUSTRIAL GROUP LIMITED

www.pipestec.com www.metallictec.com

Copyright © 1994 - 2017 All Rights Reserved.

FLANGES

ASME/ANSI B16.5， ASME/ANSI B16.47 Series A & B
MSS-SP-44
API 605/API6A
AWWA C207
DIN/UNI/EN 1092-1/BS 4504/BS10/ISO/NS/NFE29203
JIS B2220/KS B1503
SAS 1123 / SANS 1123

Table Flanges

Raised Face Weld Neck Flanges

Threaded Flanges

Raised Face Slip-On (left)
and Socketweld Flanges

Raised Face Blind Flanges

Blind Plate Flanges

TYPES AND APPLICATIONS

Slip-On Weld Flange – The flange is slipped over the pipe or tube and welded (usually both inside and outside) to provide strength and to prevent leaks. These flanges are at the low cost end of the scale, and do not require high accuracy when cutting the pipe or tube to length. They can sometimes have a boss or hub, and can be made with a bore to suit pipe or tube.

Weld Neck Flange – This flange is designed to be joined to a piping system by butt welding. It is relatively expensive because of its long neck, but is preferred for high stress applications. The neck transmits stresses to the pipe, reducing stress concentrations at the base of the flange. The gradual transition of thickness from the base to the neck to the wall thickness at the butt weld provides important reinforcement of the flange. The bore of the flange matches the bore of the pipe, reducing turbulence and erosion.

Threaded Flange – This is similar to the slip-on flange in outline, but the bore is threaded, thus enabling assembly without welding. This obviously limits its application to relatively low pressure piping systems. The flange may be welded around the joint after assembly, but this is not considered a satisfactory method of increasing its use in pressure applications.

Socketweld Flange – This is similar to a slip-on flange in outline, but the bore is counter-bored to accept the pipe. The diameter of the remaining bore is the same as the inside diameter of the pipe. The flange is attached to the pipe by a fillet weld around the hub of the flange. An optional internal weld may be applied in high stress applications. Its biggest use is in high pressure systems such as hydraulic and steam lines.

Lap Joint Flange – This is again similar to a slip-on flange, but it has a radius at the intersection of the bore and the flange face, and no raised face, to accommodate a lap joint stub end. The face of the stub end forms the gasket face of the flange. This type of flange is used in applications where sections of the piping system need to be dismantled quickly and easily for inspection or replacement, because the stub end is welded to the pipe, not the flange. As the flange is not welded to the pipe, this allows for easy alignment to the mating flange.

Blind Flange – This is a flange without a bore and is used to shut off a piping system or vessel opening. It also permits easy access to vessels or piping systems for inspection purposes.

Loose Flange – This is usually used with a pressed collar, where the flange is placed behind the collar before the collar is welded to the pipe or tube. The flange is not welded, and thus allows for easy alignment. As the flange is not in direct contact with the liquid, alternative materials can be used for the flange.

Lap Joint

Flanged Buttweld Outlets and Flanged Buttweld Nipple Outlets

Forged Flanges Class 150 – Class 2500

Spectacle Blind

GENERAL SPECIFICATION OF FLANGE

Flange Standards:

ASME/ANSI Standard: ASME/ANSI B16.5, ASME/ANSI B16.47 Series A & B, MSS-SP-44, API 605, API6A in class 150 to 2500;

AWWA C207 flanges in Class B, Class D, Class E, Class F, Ring, Blind & Hub;

European DIN, UNI, EN 1092-1, BS 4504, ISO, NS, NFE29203 flanges in Pressure PN6 to PN100;

Japanese JIS B2220 & Korean KS B1503 flanges in pressure 5K to 40K;

Russian GOST 12820-80, GOST 12821-80, GOST 12815-80 in pressure PN0.6MPa to PN10MPa;

South African SAS 1123 / SANS 1123 in Class 600kPa to 4000kPa.

Flange Materials:

-Carbon Steel:
ASTM A105/A105N
A350 LF1, LF2 CL1/CL2, LF3 CL1/CL2
A694 F42, F46, F48, F50, F52, F56, F60, F65, F70
A516.60, 65, 70 (Spectacle Blind Flange, Spacer Ring/Spade Flange)
Steel RST37.2, C22.8
-Stainless Steel:
ASTM A182 F304/304L, F316/316L, F316H, F316TI, F310, F321;
-Alloy Steel:
ASTM A182 F1, F5, F9, F11, F22, F91
-Duplex & Super Duplext Steel:

ASTM A182 F51/UNS S31803, A182 F53/UNS S32750

ASTM A182 F55 / UNS S3260

Flange Face Type:

Flate Face (FF), Raised Face (RF), Ring Type Joint (RTJ)

Flange Norminal Diameter Range:

1/2” – 96”, DN15-DN2000

Normail Pressure Range:

150# to 2500# ,PN6 to PN40,600kPa to 4000kPa,5k to 40k.

CLASS 150 FLANGES

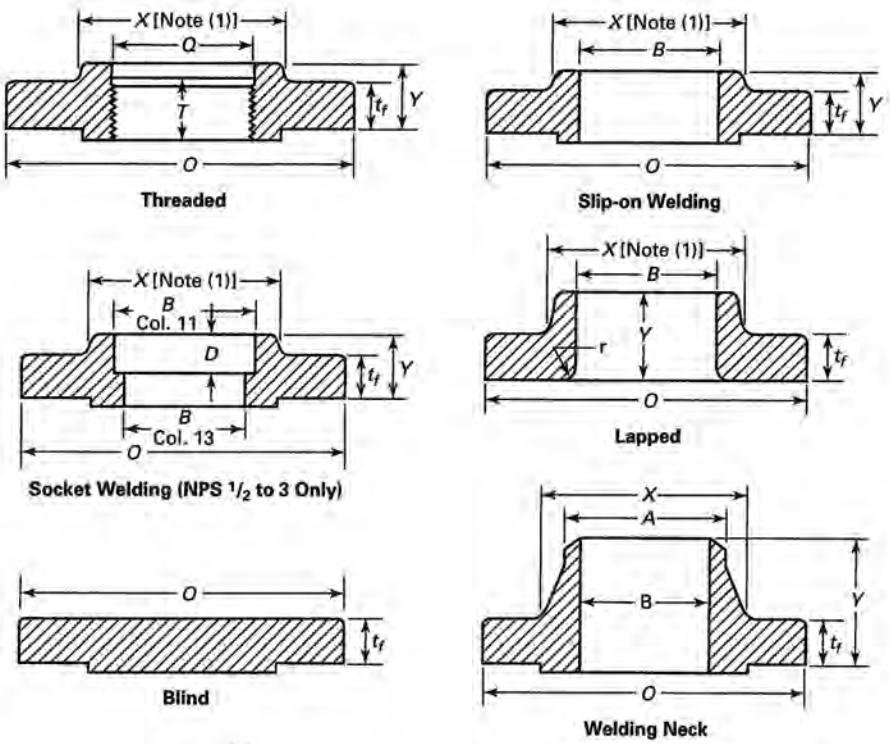

DIMENSIONS OF CLASS 150 FLANGES (mm)

1	2	3	4	5	6	7	8	9	10	11	12	13	14
	Flange dimensions		HUB dimensions		Length Through HUB			Threaded flange		SW	Bore		
Nominal Pipe Size	OD flange	Thickn.	Large end	Small end	Thr. Slip, Sw	Lapped	Weld neck	Counter bore	Thread length	Socket depth	Slip-On, SW	Lapped	Weld neck
NPS	O	tf min.#	X	A	Y	Y	Y	Q min.	T min.	D	B min.	B min.	B
1/2	90,0	9,6	30,0	21,3	14,0	16,0	46,0	. . .	16,0	10,0	22,2	22,9	15,8
3/4	100,0	11,2	38,0	26,7	14,0	16,0	51,0	. . .	16,0	11,0	27,7	28,2	20,9
1	110,0	12,7	49,0	33,4	16,0	17,0	54,0	. . .	17,0	13,0	34,5	34,9	26,6
1 ¼	115,0	14,3	59,0	42,2	19,0	21,0	56,0	. . .	21,0	14,0	43,2	43,7	35,1
1 ½	125,0	15,9	65,0	48,3	21,0	22,0	60,0	. . .	22,0	16,0	49,5	50,0	40,9
2	150,0	17,5	78,0	60,3	24,0	25,0	62,0	. . .	25,0	17,0	61,9	62,5	52,5
2 ½	180,0	20,7	90,0	73,0	27,0	29,0	68,0	. . .	29,0	19,0	74,6	75,4	62,7
3	190,0	22,3	108,0	88,9	29,0	30,0	68,0	. . .	30,0	21,0	90,7	91,4	77,9
3 ½	215,0	22,3	122,0	101,6	30,0	32,0	70,0	. . .	32,0	. . .	103,4	104,1	90,1
4	230,0	22,3	135,0	114,3	32,0	33,0	75,0	. . .	33,0	. . .	116,1	116,8	102,3
5	255,0	22,3	164,0	141,3	35,0	36,0	87,0	. . .	36,0	. . .	143,8	144,4	128,2
6	280,0	23,9	192,0	168,3	38,0	40,0	87,0	. . .	40,0	. . .	170,7	171,4	154,1
8	345,0	27,0	246,0	219,1	43,0	44,0	100,0	. . .	44,0	. . .	221,5	222,2	202,7
10	405,0	28,6	305,0	273,0	48,0	49,0	100,0	. . .	49,0	. . .	276,2	277,4	254,6
12	485,0	30,2	365,0	323,8	54,0	56,0	113,0	. . .	56,0	. . .	327,0	328,2	304,8
14	535,0	33,4	400,0	355,6	56,0	79,0	125,0	. . .	57,0	. . .	359,2	360,2	To be
16	595,0	35,0	457,0	406,4	62,0	87,0	125,0	. . .	64,0	. . .	410,5	411,2	specified
18	635,0	38,1	505,0	457,0	67,0	97,0	138,0	. . .	68,0	. . .	461,8	462,3	by
20	700,0	41,3	559,0	508,0	71,0	103,0	143,0	. . .	73,0	. . .	513,1	514,4	purchaser
24	815,0	46,1	663,0	610,0	81,0	111,0	151,0	. . .	83,0	. . .	616,0	616,0	

NOTE: All dimensions except NPS and bolt diameter are in millimeters. The dimensions B_2 for SW flange equals B for Weld Neck.
(1) the tolerance for E is only applicable for groove depth
Lapped flange shall be 1.6 mm thicker than table value.

CLASS 150 FLANGES

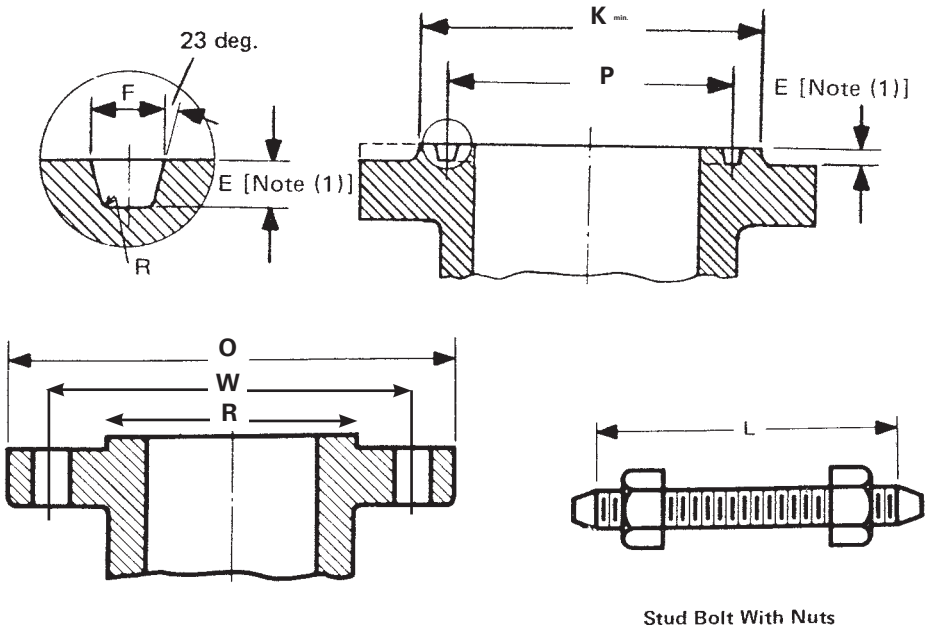

DIMENSIONS OF CLASS 150 FLANGES (mm)

15	16	17	18	19	20	21	22	23	24	25	26	27	28	29
	RF dimensions		RTJ dimensions						Bolt hole drilling				Stud bolt length	
Nominal Pipe Size	OD	Height	OD	Height	Groove number	Groove Pitch	Groove Depth	Groove Width	Bolt Circle	Bolt hole	No of bolts	Bolt diam.	2,0mm RF	Ring Joint
NPS	R		K	E		P	E	F	W	Bh			L	L
1/2	34,9	2,0	. . .	. . .	. . .	. . .	. . .	. . .	60,3	15,9	4	1/2	55,0	. . .
3/4	42,9	2,0	. . .	. . .	. . .	. . .	. . .	. . .	69,9	15,9	4	1/2	65,0	. . .
1	50,8	2,0	63,5	6,35	R15	47,63	6,35	8,74	79,4	15,9	4	1/2	65,0	75,0
1 ¼	63,5	2,0	73,0	6,35	R17	57,15	6,35	8,74	88,9	15,9	4	1/2	70,0	85,0
1 ½	73,0	2,0	82,5	6,35	R19	65,07	6,35	8,74	98,4	15,9	4	1/2	70,0	85,0
2	92,1	2,0	102,0	6,35	R22	82,55	6,35	8,74	120,7	19,1	4	5/8	85,0	95,0
2 ½	104,8	2,0	121,0	6,35	R25	101,60	6,35	8,74	139,7	19,1	4	5/8	90,0	100,0
3	127,0	2,0	133,0	6,35	R29	114,30	6,35	8,74	152,4	19,1	4	5/8	90,0	100,0
3 ½	139,7	2,0	154,0	6,35	R33	131,78	6,35	8,74	177,8	19,1	8	5/8	90,0	100,0
4	157,2	2,0	171,0	6,35	R36	149,23	6,35	8,74	190,5	19,1	8	5/8	90,0	100,0
5	185,7	2,0	194,0	6,35	R40	171,45	6,35	8,74	215,9	22,2	8	3/4	95,0	110,0
6	215,9	2,0	219,0	6,35	R43	193,68	6,35	8,74	241,3	22,2	8	3/4	100,0	115,0
8	269,9	2,0	273,0	6,35	R48	247,65	6,35	8,74	298,5	22,2	8	3/4	110,0	120,0
10	323,8	2,0	330,0	6,35	R52	304,80	6,35	8,74	362,0	25,4	12	7/8	115,0	125,0
12	381,0	2,0	406,0	6,35	R56	381,00	6,35	8,74	431,8	25,4	12	7/8	120,0	135,0
14	412,8	2,0	425,0	6,35	R59	396,88	6,35	8,74	476,3	28,6	12	1	135,0	145,0
16	469,9	2,0	483,0	6,35	R64	454,03	6,35	8,74	539,8	28,6	16	1	135,0	145,0
18	533,4	2,0	546,0	6,35	R68	517,53	6,35	8,74	577,9	31,8	16	1 ⅛	145,0	160,0
20	584,2	2,0	597,0	6,35	R72	558,80	6,35	8,74	635,0	31,8	20	1 ⅛	160,0	170,0
24	692,2	2,0	711,0	6,35	R76	673,10	6,35	8,74	749,3	34,9	20	1 ¼	170,0	185,0

NOTE: All dimensions except NPS and bolt diameter are in millimeters. The dimensions B_2 for SW flange equals B for Weld Neck.
(1) the tolerance for E is only applicable for groove depth

CLASS 300 FLANGES

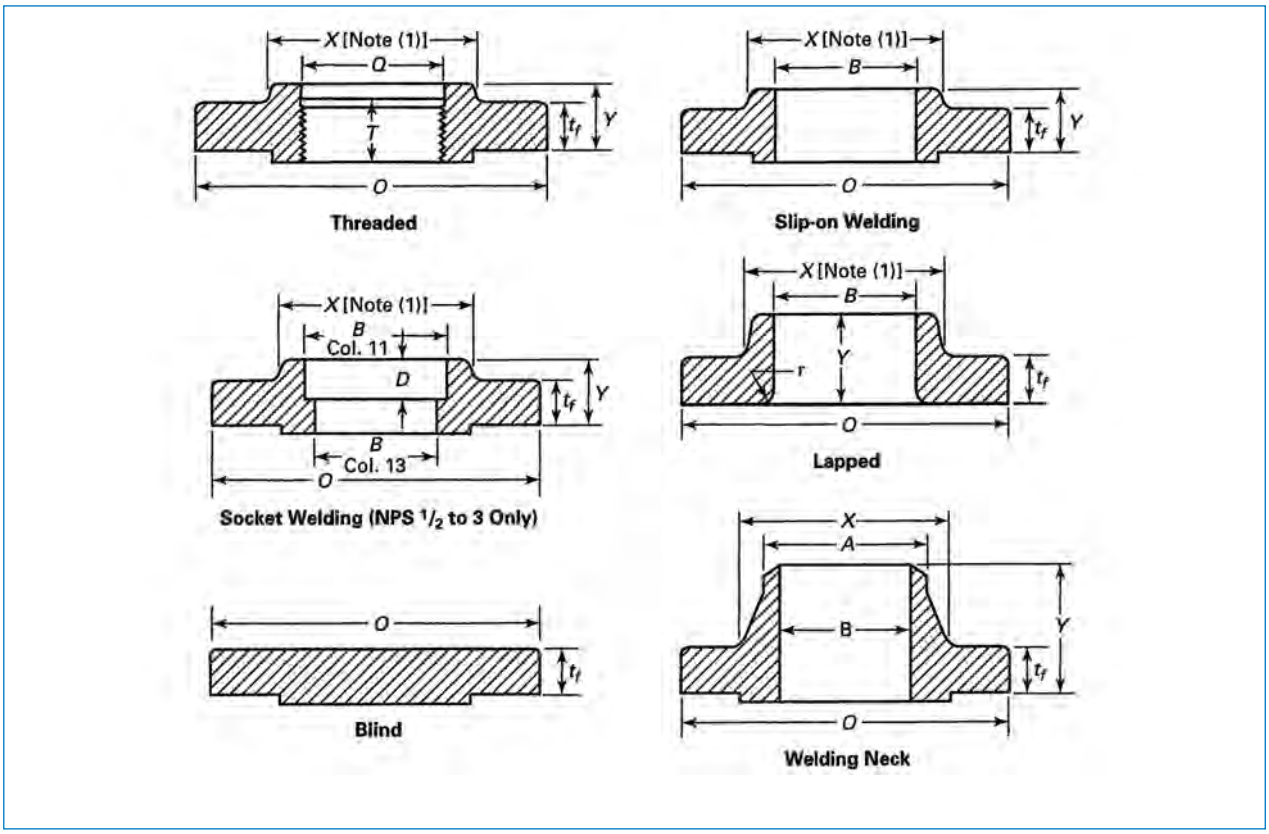

DIMENSIONS OF CLASS 300 FLANGES (mm)

1	2	3	4	5	6	7	8	9	10	11	12	13	14
	Flange dimensions		HUB dimensions		Length Through HUB			Threaded flange		SW	Bore		
Nominal Pipe Size	OD flange	Thickn.	Large end	Small end	Thr. Slip, Sw.	Lapped	Weld neck	Counter bore	Thread length	Socket depth	Slip-On, SW	Lapped	Weld neck
NPS	O	tf min.#	X	A	Y	Y	Y	Q min.	T min.	D	B min.	B min.	B
1/2	95,0	12,7	38,0	21,3	21,0	22,0	51,0	23,6	16,0	10,0	22,2	22,9	15,8
3/4	115,0	14,3	48,0	26,7	24,0	25,0	56,0	29,0	16,0	11,0	27,7	28,2	20,9
1	125,0	15,9	54,0	33,4	25,0	27,0	60,0	35,8	18,0	13,0	34,5	34,9	26,6
1 ¼	135,0	17,5	64,0	42,2	25,0	27,0	64,0	44,4	21,0	14,0	43,2	43,7	35,1
1 ½	155,0	19,1	70,0	48,3	29,0	30,0	67,0	50,3	23,0	16,0	49,5	50,0	40,9
2	165,0	20,7	84,0	60,3	32,0	33,0	68,0	63,5	29,0	17,0	61,9	62,5	52,5
2 ½	190,0	23,9	100,0	73,0	37,0	38,0	75,0	76,2	32,0	19,0	74,6	75,4	62,7
3	210,0	27,0	117,0	88,9	41,0	43,0	78,0	92,2	32,0	21,0	90,7	91,4	77,9
3 ½	230,0	28,6	133,0	101,6	43,0	44,0	79,0	104,9	37,0	. . .	103,4	104,1	90,1
4	255,0	30,2	146,0	114,3	46,0	48,0	84,0	117,6	37,0	. . .	116,1	116,8	102,3
5	280,0	33,4	178,0	141,3	49,0	51,0	97,0	144,4	43,0	. . .	143,8	144,4	128,2
6	320,0	35,0	206,0	168,3	51,0	52,0	97,0	171,4	47,0	. . .	170,7	171,4	154,1
8	380,0	39,7	260,0	219,1	60,0	62,0	110,0	222,2	51,0	. . .	221,5	222,2	202,7
10	445,0	46,1	321,0	273,0	65,0	95,0	116,0	276,2	56,0	. . .	276,2	277,4	254,6
12	520,0	49,3	375,0	323,8	71,0	102,0	129,0	328,6	61,0	. . .	327,0	328,2	304,8
14	585,0	52,4	425,0	355,6	75,0	111,0	141,0	360,4	64,0	. . .	359,2	360,2	To be
16	650,0	55,6	483,0	406,4	81,0	121,0	144,0	411,2	69,0	. . .	410,5	411,2	specified
18	710,0	58,8	533,0	457,0	87,0	130,0	157,0	462,0	70,0	. . .	461,8	462,3	by
20	775,0	62,0	587,0	508,0	94,0	140,0	160,0	512,8	74,0	. . .	513,1	514,4	purchaser
24	915,0	68,3	702,0	610,0	105,0	152,0	167,0	614,4	83,0	. . .	616,0	616,0	

NOTE: All dimensions except NPS and bolt diameter are in millimeters. The dimensions B_2 for SW flange equals B for Weld Neck.
(1) the tolerance for E is only applicable for groove depth
Lapped flange shall be 1.6 mm thicker than table value.

CLASS 300 FLANGES

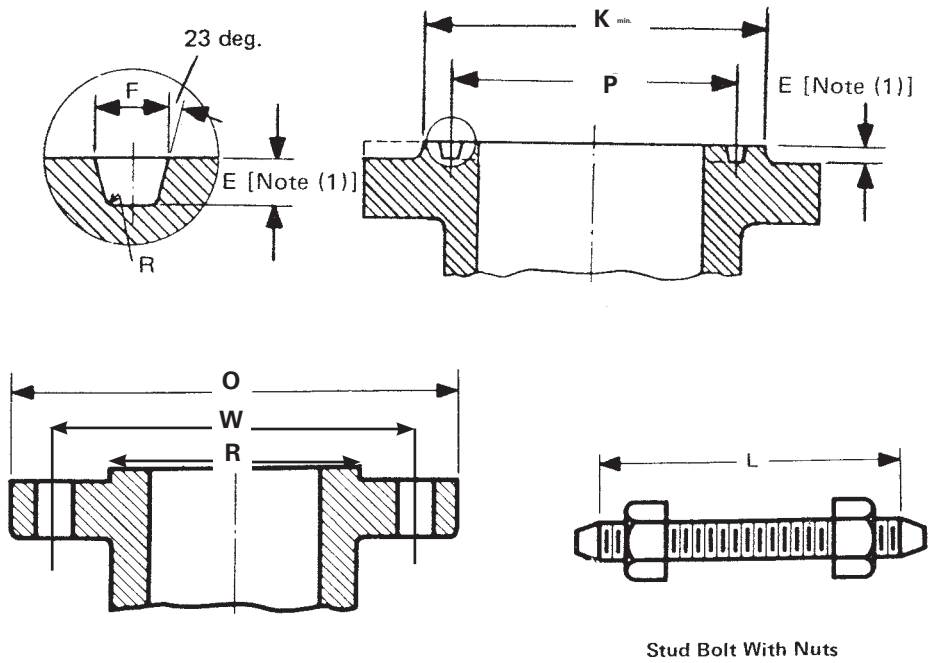

DIMENSIONS OF CLASS 300 FLANGES (mm)

15	16	17	18	19	20	21	22	23	24	25	26	27	28	29
	RF dimensions		RTJ dimensions						Bolt hole drilling				Stud bolt length	
Nominal Pipe Size	OD	Height	OD	Height	Groove number	Groove Pitch	Groove Depth	Groove Width	Bolt Circle	Bolt hole	No of bolts	Bolt diam.	2,0mm RF	Ring Joint
NPS	R		K	E		P	E	F	W	Bh			L	L
1/2	34,9	2,0	51,0	5,54	R11	34,14	5,54	7,14	66,7	15,9	4	1/2	65,0	75,0
3/4	42,9	2,0	63,5	6,35	R13	42,88	6,35	8,74	82,6	19,1	4	5/8	75,0	90,0
1	50,8	2,0	70,0	6,35	R16	50,80	6,35	8,74	88,9	19,1	4	5/8	75,0	90,0
1 ¼	63,5	2,0	79,5	6,35	R18	60,33	6,35	8,74	98,4	19,1	4	5/8	85,0	95,0
1 ½	73,0	2,0	90,5	6,35	R20	68,27	6,35	8,74	114,3	22,2	4	3/4	90,0	100,0
2	92,1	2,0	108,0	7,92	R23	82,55	7,92	11,91	127,0	19,1	8	5/8	90,0	100,0
2 ½	104,8	2,0	127,0	7,92	R26	101,60	7,92	11,91	149,2	22,2	8	3/4	100,0	115,0
3	127,0	2,0	146,0	7,92	R31	123,83	7,92	11,91	168,3	22,2	8	3/4	110,0	120,0
3 ½	139,7	2,0	159,0	7,92	R34	131,78	7,92	11,91	184,2	22,2	8	3/4	110,0	125,0
4	157,2	2,0	175,0	7,92	R37	149,23	7,92	11,91	200,0	22,2	8	3/4	115,0	125,0
5	185,7	2,0	210,0	7,92	R41	180,98	7,92	11,91	235,0	22,2	8	3/4	120,0	135,0
6	215,9	2,0	241,0	7,92	R45	211,12	7,92	11,91	269,9	22,2	12	3/4	120,0	140,0
8	269,9	2,0	302,0	7,92	R49	269,88	7,92	11,91	330,2	25,4	12	7/8	140,0	150,0
10	323,8	2,0	356,0	7,92	R53	323,85	7,92	11,91	387,4	28,6	16	1	160,0	170,0
12	381,0	2,0	413,0	7,92	R57	381,00	7,92	11,91	450,8	31,8	16	1 ⅛	170,0	185,0
14	412,8	2,0	457,0	7,92	R61	419,10	7,92	11,91	514,4	31,8	20	1 ⅛	180,0	190,0
16	469,9	2,0	508,0	7,92	R65	469,90	7,92	11,91	571,5	34,9	20	1 ¼	190,0	205,0
18	533,4	2,0	575,0	7,92	R69	533,40	7,92	11,91	628,6	34,9	24	1 ¼	195,0	210,0
20	584,2	2,0	635,0	9,53	R73	584,20	9,53	13,49	685,8	34,9	24	1 ¼	205,0	220,0
24	692,2	2,0	749,0	11,13	R77	692,15	11,13	16,66	812,8	41,3	24	1 ½	230,0	255,0

NOTE: All dimensions except NPS and bolt diameter are in millimeters. The dimensions B_2 for SW flange equals B for Weld Neck.
(1) the tolerance for E is only applicable for groove depth

CLASS 400 FLANGES

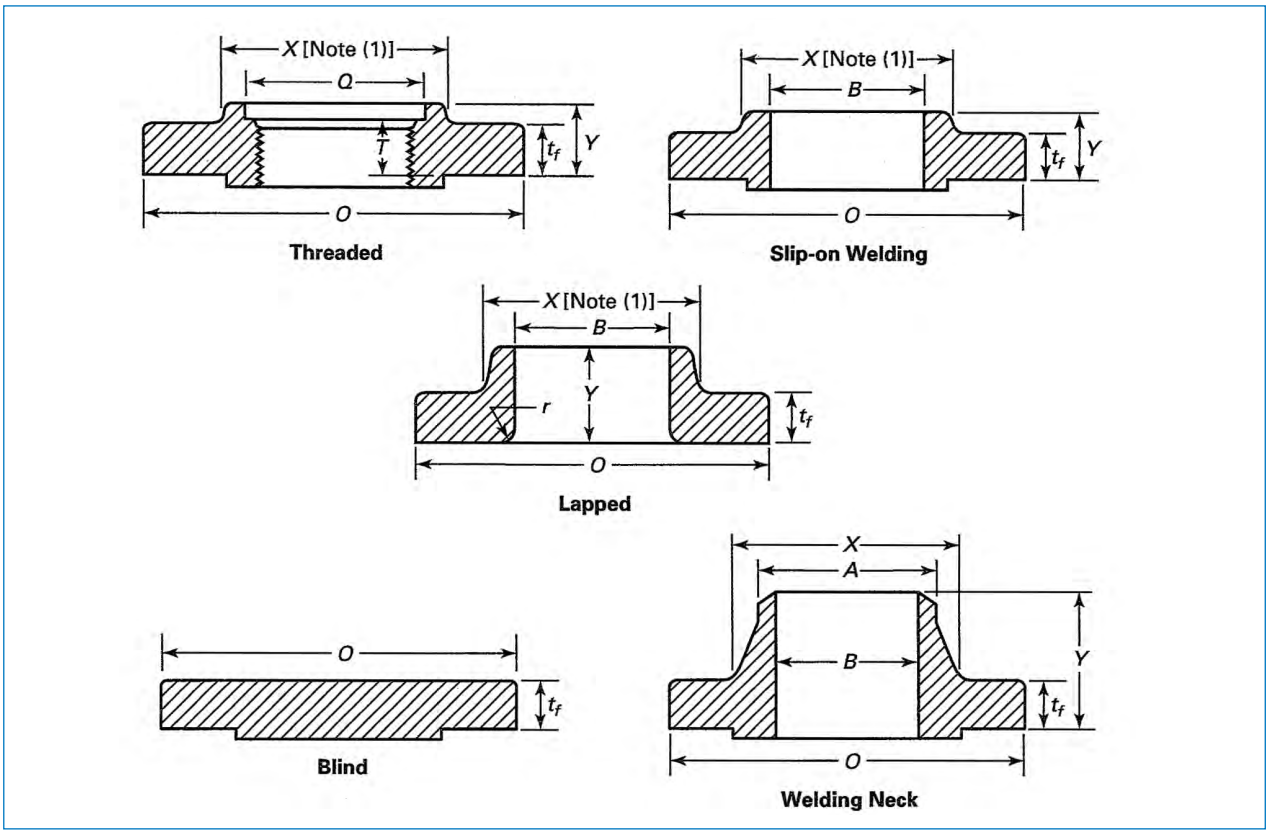

DIMENSIONS OF CLASS 400 FLANGES (mm)

1	2	3	4	5	6	7	8	9	10	11	12	13	14
	Flange dimensions		HUB dimensions		Length Through HUB			Threaded flange		SW	Bore		
Nominal Pipe Size	OD flange	Thickn.	Large end	Small end	Thr. Slip.	Lapped	Weld neck	Counter bore	Thread length	Socket depth	Slip-On,	Lapped	Weld neck
NPS	O	tf min.	X	A	Y	Y	Y	Q min.	T min.	D	B min.	B min.	B
1/2													
3/4													
1													
1 ¼					Use Class 600 dimensions in these sizes								
1 ½													
2													
2 ½													
3													
3 ½													
4	255,0	35,0	146,0	114,3	51,0	51,0	89,0	117,6	37,0	. . .	116,1	116,8	
5	280,0	38,1	178,0	141,3	54,0	54,0	102,0	144,4	43,0	. . .	143,8	144,5	To be
6	320,0	41,3	206,0	168,3	57,0	57,0	103,0	171,4	46,0	. . .	170,7	171,4	specified
8	380,0	47,7	260,0	219,1	68,0	68,0	117,0	222,2	51,0	. . .	221,5	222,2	by
10	445,0	54,0	321,0	273,0	73,0	102,0	124,0	276,2	56,0	. . .	276,2	277,4	purchaser
12	520,0	57,2	375,0	323,8	79,0	108,0	137,0	328,6	61,0	. . .	327,0	328,2	
14	585,0	60,4	425,0	355,6	84,0	117,0	149,0	360,4	64,0	. . .	359,2	360,2	
16	650,0	63,5	483,0	406,4	94,0	127,0	152,0	411,2	69,0	. . .	410,5	411,2	
18	710,0	66,7	533,0	457,0	98,0	137,0	165,0	462,0	70,0	. . .	461,8	462,3	
20	775,0	69,9	587,0	508,0	102,0	146,0	168,0	512,8	74,0	. . .	513,1	514,4	
24	915,0	76,2	702,0	610,0	114,0	159,0	175,0	614,4	83,0	. . .	616,0	616,0	

NOTE: All dimensions except NPS and bolt diameter are in millimeters.
(1) the tolerance for E is only applicable for groove depth

CLASS 400 FLANGES

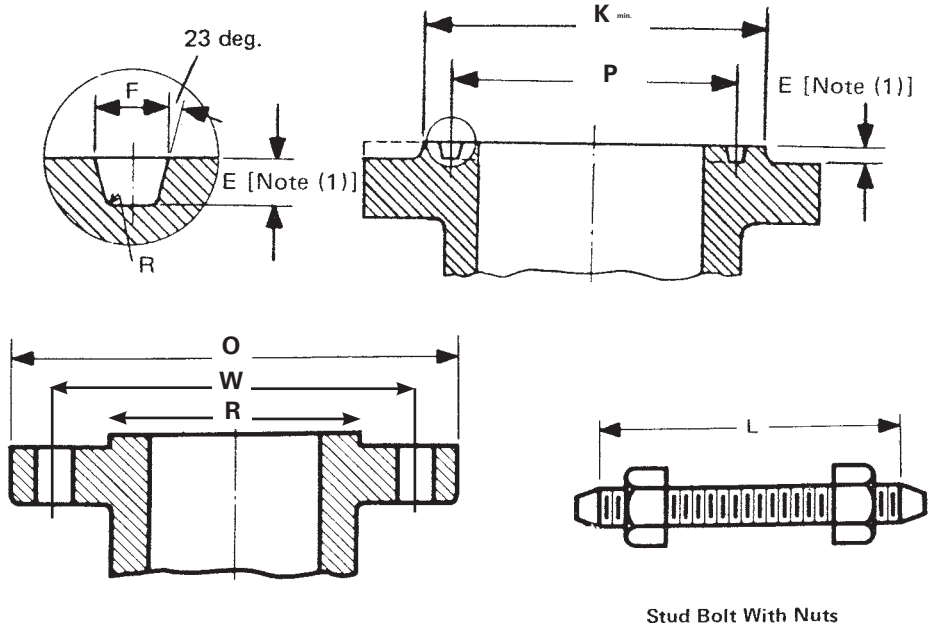

DIMENSIONS OF CLASS 400 FLANGES (mm)

15	16	17	18	19	20	21	22	23	24	25	26	27	28	29
	RF dimensions		RTJ dimensions						Bolt hole drilling				Stud bolt length	
Nominal Pipe Size	OD	Height	OD	Height	Groove number	Groove Pitch	Groove Depth	Groove Width	Bolt Circle	Bolt hole	No of RF	Bolt diam.	7,0 mm RF	Ring Joint
NPS	R		K	E		P	E	F	W	Bh			L	L
1/2														
3/4														
1														
1 ¼			Use Class 600 dimensions in these sizes											
1 ½														
2														
2 ½														
3														
3 ½														
4	157,2	7,0	175,0	7,92	R37	149,23	7,92	11,91	200,0	25,4	8	7/8	140,0	140,0
5	185,7	7,0	210,0	7,92	R41	180,98	7,92	11,91	235,0	25,4	8	7/8	145,0	145,0
6	215,9	7,0	241,0	7,92	R45	211,12	7,92	11,91	269,9	25,4	12	7/8	150,0	150,0
8	269,9	7,0	302,0	7,92	R49	269,88	7,92	11,91	330,0	28,6	12	1	170,0	170,0
10	323,8	7,0	356,0	7,92	R53	323,85	7,92	11,91	387,4	31,8	16	1 ⅛	190,0	190,0
12	381,0	7,0	413,0	7,92	R57	381,00	7,92	11,91	450,8	34,9	16	1 ¼	205,0	205,0
14	412,8	7,0	457,0	7,92	R61	419,10	7,92	11,91	514,4	34,9	20	1 ¼	210,0	210,0
16	469,9	7,0	508,0	7,92	R65	469,90	7,92	11,91	571,5	38,1	20	1 ⅜	220,0	220,0
18	533,4	7,0	575,0	7,92	R69	533,40	7,92	11,91	628,6	38,1	24	1 ⅜	230,0	230,0
20	584,2	7,0	635,0	9,53	R73	584,20	9,53	13,49	685,8	41,3	24	1 ½	240,0	250,0
24	692,2	7,0	749,0	11,13	R77	692,15	11,13	16,66	812,8	47,6	24	1 ¾	265,0	280,0

NOTE: All dimensions except NPS and bolt diameter are in millimeters.
(1) the tolerance for E is only applicable for groove depth

CLASS 600 FLANGES

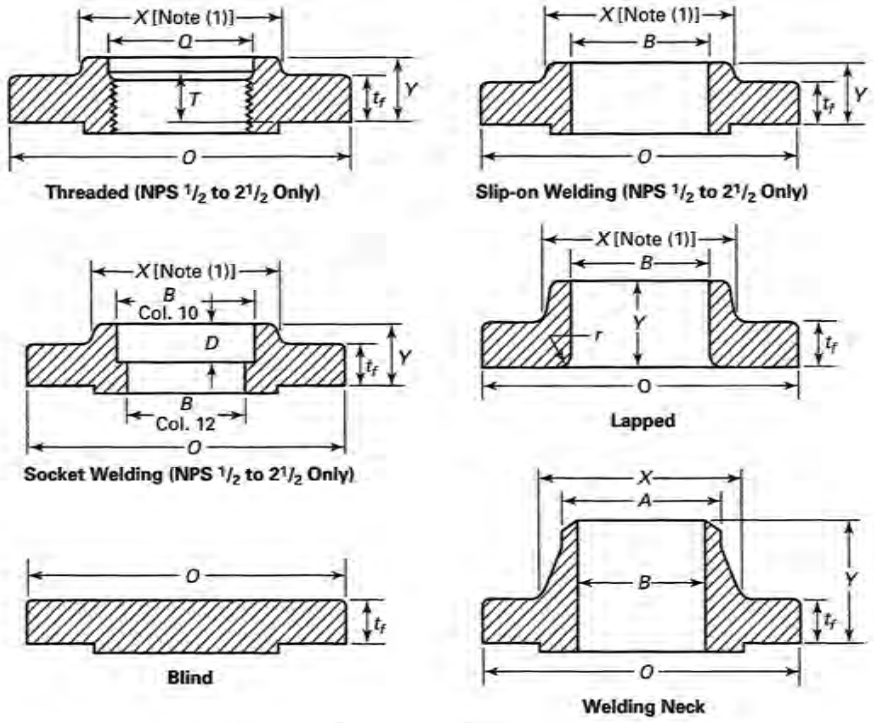

DIMENSIONS OF CLASS 600 FLANGES (mm)

1	2	3	4	5	6	7	8	9	10	11	12	13	14
	Flange dimensions		HUB dimensions		Length Through HUB			Threaded flange			SW Bore		
Nominal Pipe Size	OD flange	Thickn.	Large end	Small end	Thr. Slip. SW	Lapped	Weld neck	Counter bore	Thread length	Socket depth	Slip-On, SW	Lapped	Weld neck
NPS	O	tf min.	X	A	Y	Y	Y	Q min.	T min.	D	B min.	B min.	B
1/2	95,0	14,3	38,0	21,3	22,0	22,0	52,0	23,6	16,0	10,0	22,2	22,9	
3/4	115,0	15,9	48,0	26,7	25,0	25,0	57,0	29,0	16,0	11,0	27,7	28,2	
1	125,0	17,5	54,0	33,4	27,0	27,0	62,0	35,8	18,0	13,0	34,5	34,9	
1 ¼	135,0	20,7	64,0	42,2	29,0	29,0	67,0	44,4	21,0	14,0	43,2	43,7	
1 ½	155,0	22,3	70,0	48,3	32,0	32,0	70,0	50,6	23,0	16,0	49,5	50,0	
2	165,0	25,4	84,0	60,3	37,0	37,0	73,0	63,5	29,0	17,0	61,9	62,5	
2 ½	190,0	28,6	100,0	73,0	41,0	41,0	79,0	76,2	32,0	19,0	74,6	75,4	
3	210,0	31,8	117,0	88,9	46,0	46,0	83,0	92,2	35,0	21,0	90,7	91,4	
3 ½	230,0	35,0	133,0	101,6	49,0	49,0	86,0	104,9	40,0	, , ,	103,4	104,1	
4	275,0	38,1	152,0	114,3	54,0	54,0	102,0	117,6	42,0	, , ,	116,1	116,8	To be
5	330,0	44,5	189,0	141,3	60,0	60,0	114,0	144,4	48,0	, , ,	143,8	144,4	specified
6	355,0	47,7	222,0	168,3	67,0	67,0	117,0	171,4	51,0	, , ,	170,7	171,4	by
8	420,0	55,6	273,0	219,1	76,0	76,0	133,0	222,2	58,0	, , ,	221,5	222,2	purchaser
10	510,0	63,5	343,0	273,0	86,0	111,0	152,0	276,2	66,0	, , ,	276,2	277,4	
12	560,0	66,7	400,0	323,8	92,0	117,0	156,0	328,6	70,0	, , ,	327,0	328,2	
14	605,0	69,9	432,0	355,6	94,0	127,0	165,0	360,4	74,0	, , ,	359,2	360,2	
16	685,0	76,2	495,0	406,4	106,0	140,0	178,0	411,2	78,0	, , ,	410,5	411,2	
18	745,0	82,6	546,0	457,0	117,0	152,0	184,0	462,0	80,0	, , ,	461,8	462,3	
20	815,0	88,9	610,0	508,0	127,0	165,0	190,0	512,8	83,0	, , ,	513,1	514,4	
24	940,0	101,6	718,0	610,0	140,0	184,0	203,0	614,4	93,0	, , ,	616,0	616,0	

NOTE: All dimensions except NPS and bolt diameter are in millimeters. The dimensions B_2 for SW flange equals B for Weld Neck.
(1) the tolerance for E is only applicable for groove depth

CLASS 600 FLANGES

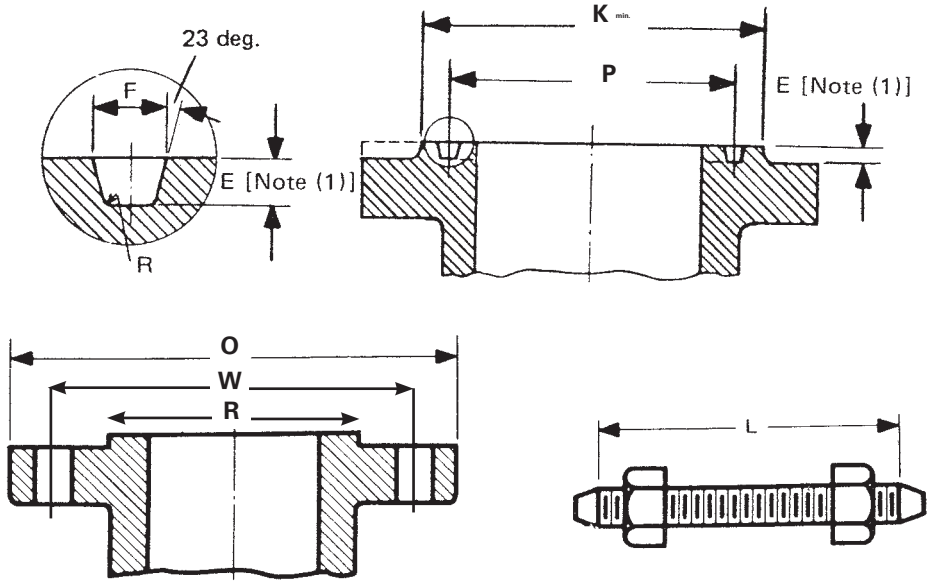

Stud Bolt With Nuts

DIMENSIONS OF CLASS 600 FLANGES (mm)

15	16	17	18	19	20	21	22	23	24	25	26	27	28	29
	RF dimensions		RTJ dimensions						Bolt hole drilling				Stud bolt length	
Nominal Pipe Size	OD	Height	OD	Height	Groove number	Groove Pitch	Groove Depth	Groove Width	Bolt Circle	Bolt hole	No of bolts	Bolt diam.	7.0 mm RF	Ring Joint
NPS	R		K	E		P	E	F	W	Bh			L	L
1/2	34,9	7,0	51,0	5,54	R11	34,14	5,54	7,14	66,7	15,9	4	1/2	75,0	75,0
3/4	42,9	7,0	63,5	6,35	R13	42,88	6,35	8,74	82,6	19,1	4	5/8	90,0	90,0
1	50,8	7,0	70,0	6,35	R16	50,80	6,35	8,74	88,9	19,1	4	5/8	90,0	90,0
1 ¼	63,5	7,0	79,5	6,35	R18	60,33	6,35	8,74	98,4	19,1	4	5/8	95,0	95,0
1 ½	73,0	7,0	90,5	6,35	R20	68,27	6,35	8,74	114,3	22,2	4	3/4	110,0	110,0
2	92,1	7,0	108,0	7,92	R23	82,55	7,92	11,91	127,0	19,1	8	5/8	110,0	110,0
2 ½	104,8	7,0	127,0	7,92	R26	101,60	7,92	11,91	149,2	22,2	8	3/4	120,0	120,0
3	127,0	7,0	146,0	7,92	R31	123,83	7,92	11,91	168,3	22,2	8	3/4	125,0	125,0
3 ½	139,7	7,0	159,0	7,92	R34	131,78	7,92	11,91	184,2	25,4	8	7/8	140,0	140,0
4	157,2	7,0	175,0	7,92	R37	149,23	7,92	11,91	215,9	25,4	8	7/8	145,0	145,0
5	185,7	7,0	210,0	7,92	R41	180,98	7,92	11,91	266,7	28,6	8	1	165,0	165,0
6	215,9	7,0	241,0	7,92	R45	211,12	7,92	11,91	292,1	28,6	12	1	170,0	170,0
8	269,9	7,0	302,0	7,92	R49	269,88	7,92	11,91	349,2	31,8	12	1 ⅛	190,0	195,0
10	323,8	7,0	356,0	7,92	R53	323,85	7,92	11,91	431,8	34,9	16	1 ¼	215,0	215,0
12	381,0	7,0	413,0	7,92	R57	381,00	7,92	11,91	489,0	34,9	20	1 ¼	220,0	220,0
14	412,8	7,0	457,0	7,92	R61	419,10	7,92	11,91	527,0	38,1	20	1 ⅜	235,0	235,0
16	469,9	7,0	508,0	7,92	R65	469,90	7,92	11,91	603,2	41,3	20	1 ½	255,0	255,0
18	533,4	7,0	575,0	7,92	R69	533,40	7,92	11,91	654,0	44,5	20	1 ⅝	275,0	275,0
20	584,2	7,0	635,0	9,53	R73	584,20	9,53	13,49	723,9	44,5	24	1 ⅝	285,0	290,0
24	692,2	7,0	749,0	11,13	R77	692,15	11,13	16,66	838,2	50,8	24	1 ⅞	330,0	335,0

NOTE: All dimensions except NPS and bolt diameter are in millimeters. The dimensions B for SW flange equals B for Weld Neck.
(1) the tolerance for E is only applicable for groove depth

CLASS 900 FLANGES

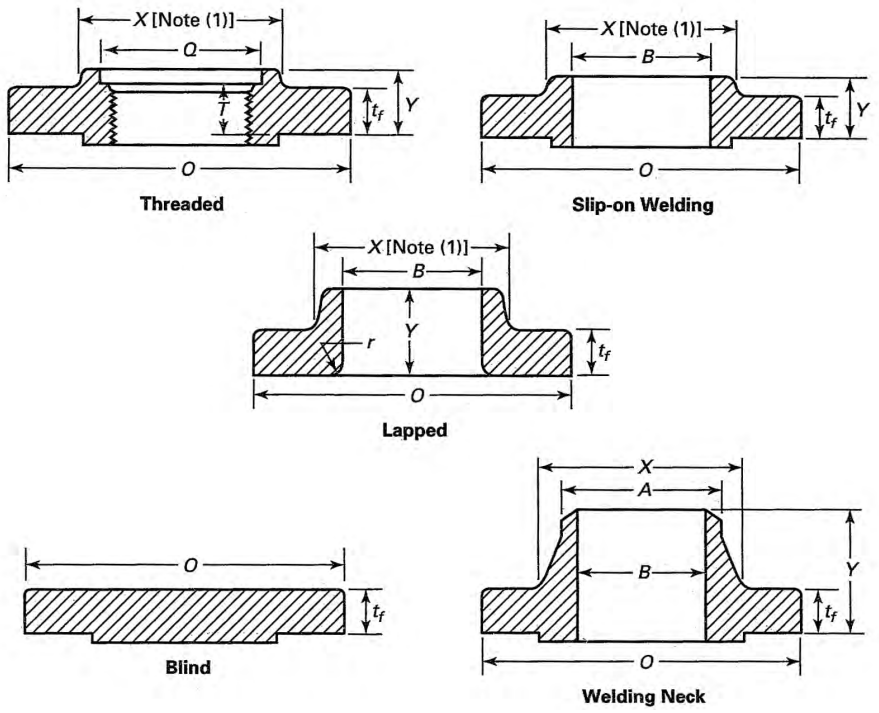

DIMENSIONS OF CLASS 900 FLANGES (mm)

1	2	3	4	5	6	7	8	9	10	11	12	13	14
	Flange dimensions		HUB dimensions		Length Through HUB			Threaded flange		SW	Bore		
Nominal Pipe Size	OD flange	Thickn.	Large end	Small end	Thr. Slip.	Lapped	Weld neck	Counter bore	Thread length	Socket depth	Slip-On	Lapped	Weld neck
NPS	O	tf min.	X	A	Y	Y	Y	Q min.	T min.	D	B min.	B min.	B
1/2													
3/4													
1													
1 ¼													
1 ½					Use Class 1500 dimensions in these sizes								
2													
2 ½													
3	240,0	38,1	127,0	88,9	54,0	54,0	102,0	92,2	42,0	. . .	90,7	91,4	
4	290,0	44,5	159,0	114,3	70,0	70,0	114,0	117,6	48,0	. . .	116,1	116,8	To be
5	350,0	50,8	190,0	141,3	79,0	79,0	127,0	144,4	54,0	. . .	143,8	144,4	specified
6	380,0	55,6	235,0	168,3	86,0	86,0	140,0	171,4	58,0	. . .	170,7	171,4	by
8	470,0	63,5	298,0	219,1	102,0	114,0	162,0	222,2	64,0	. . .	221,5	222,2	purchaser
10	545,0	69,9	368,0	273,0	108,0	127,0	184,0	276,2	72,0	. . .	276,2	277,4	
12	610,0	79,4	419,0	323,8	117,0	143,0	200,0	328,6	77,0	. . .	327,0	328,2	
14	640,0	85,8	451,0	355,6	130,0	156,0	213,0	360,4	83,0	. . .	359,2	360,2	
16	705,0	88,9	508,0	406,4	133,0	165,0	216,0	411,2	86,0	. . .	410,5	411,2	
18	785,0	101,6	565,0	457,0	152,0	190,0	229,0	462,0	89,0	. . .	461,8	462,3	
20	855,0	108,0	622,0	508,0	159,0	210,0	248,0	512,8	93,0	. . .	513,1	514,4	
24	1040,0	139,7	749,0	610,0	203,0	267,0	292,0	614,4	102,0	. . .	616,0	616,0	

NOTE: All dimensions except NPS and bolt diameter are in millimeters.
(1) the tolerance for E is only applicable for groove depth

CLASS 900 FLANGES

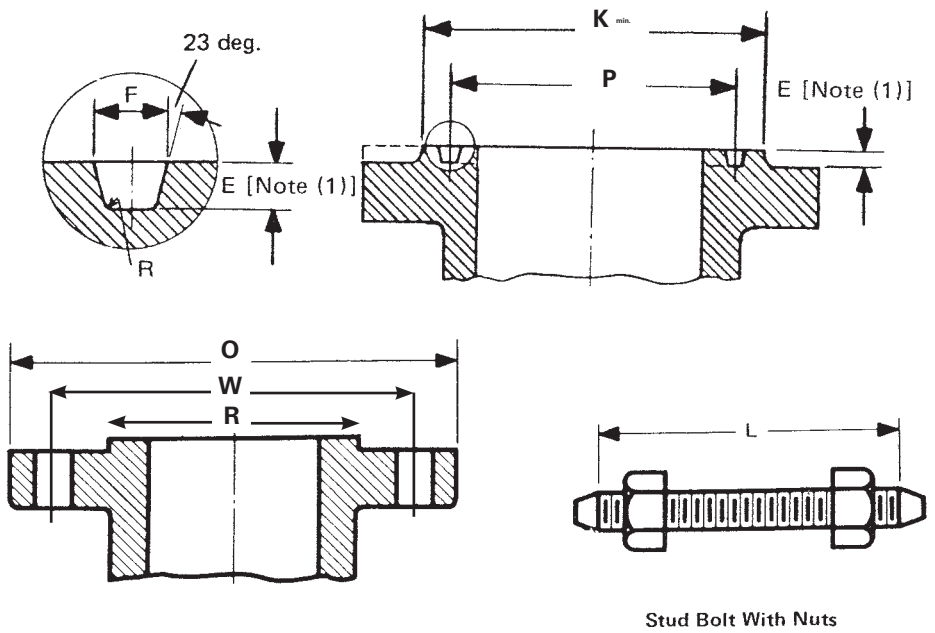

DIMENSIONS OF CLASS 900 FLANGES (mm)

15	16	17	18	19	20	21	22	23	24	25	26	27	28	29
	RF dimensions		RTJ dimensions						Bolt hole drilling				Stud bolt length	
Nominal Pipe Size	OD	Height	OD	Height	Groove number	Groove Pitch	Groove Depth	Groove Width	Bolt Circle	Bolt hole	No of bolts	Bolt diam.	7,0 mm RF	Ring Joint
NPS	R		K	E		P	E	F	W	Bh			L	L
1/2														
3/4														
1														
1 ¼														
1 ½			Use Class 1500 dimensions in these sizes											
2														
2 ½														
3	127,0	7,0	156,0	7,92	R31	123,83	7,92	11,91	190,5	25,4	8	7/8	145,0	145,0
4	157,2	7,0	181,0	7,92	R37	149,23	7,92	11,91	235,0	31,8	8	1 ⅛	170,0	170,0
5	185,7	7,0	216,0	7,92	R41	180,98	7,92	11,91	279,4	34,9	8	1 ¼	190,0	190,0
6	215,9	7,0	241,0	7,92	R45	211,12	7,92	11,91	317,5	31,8	12	1 ⅛	190,0	195,0
8	269,9	7,0	308,0	7,92	R49	269,88	7,92	11,91	393,7	38,1	12	1 ⅜	220,0	220,0
10	323,8	7,0	362,0	7,92	R53	323,85	7,92	11,91	469,9	38,1	16	1 ⅜	235,0	235,0
12	381,0	7,0	419,0	7,92	R57	381,00	7,92	11,91	533,4	38,1	20	1 ⅜	255,0	255,0
14	412,8	7,0	467,0	11,13	R62	419,10	11,13	16,66	558,8	41,3	20	1 ½	275,0	280,0
16	469,9	7,0	524,0	11,13	R66	469,90	11,13	16,66	616,0	44,5	20	1 ⅝	285,0	290,0
18	533,4	7,0	594,0	12,70	R70	533,40	12,70	19,84	685,8	50,8	20	1 ⅞	325,0	335,0
20	584,2	7,0	648,0	12,70	R74	584,20	12,70	19,84	749,3	54,0	20	2	350,0	360,0
24	692,2	7,0	772,0	15,88	R78	692,15	15,88	26,97	901,7	66,7	20	2 ½	440,0	455,0

NOTE: All dimensions except NPS and bolt diameter are in millimeters.
(1) the tolerance for E is only applicable for groove depth

CLASS 1500 FLANGES

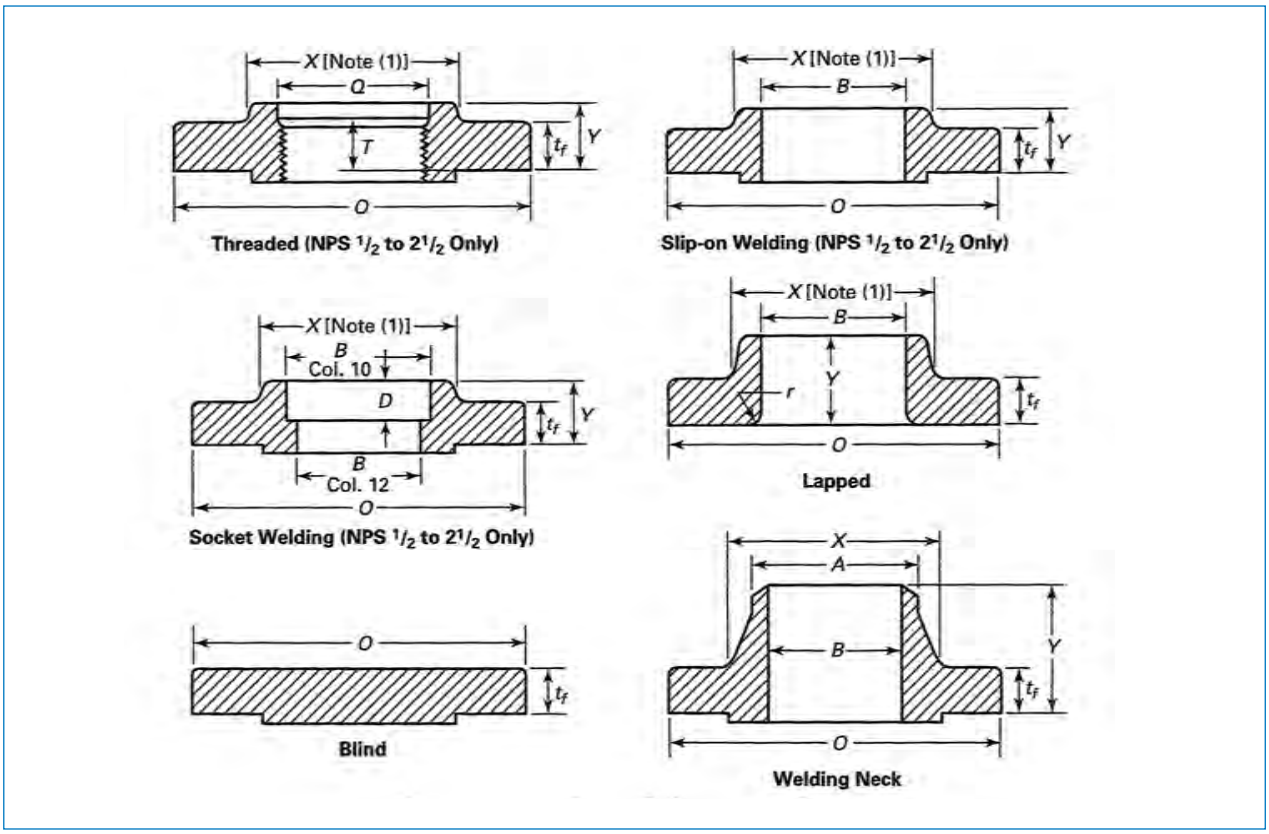

DIMENSIONS OF CLASS 1500 FLANGES (mm)

1	2	3	4	5	6	7	8	9	10	11	12	13	14
	Flange dimensions		HUB dimensions		Length Through HUB			Threaded flange		SW	Bore		
Nominal Pipe Size	OD fla nge	Thickn.	Large end	Small end	Thr. Slip, Sw.	Lapped	Weld neck	Counter bore	Thread length	Socket depth	Slip-On, SW	Lapped	Weld neck
NPS	O	tf min.	X	A	Y	Y	Y	Q min.	T min.	D	B min.	B min.	B
1/2	120,0	22,3	38,0	21,3	32,0	32,0	60,0	23,6	23,0	10,0	22,2	22,9	
3/4	130,0	25,4	44,0	26,7	35,0	35,0	70,0	29,0	26,0	11,0	27,7	28,2	
1	150,0	28,6	52,0	33,4	41,0	41,0	73,0	35,8	29,0	13,0	34,5	34,9	
1 ¼	160,0	28,6	64,0	42,2	41,0	41,0	73,0	44,4	31,0	14,0	43,2	43,7	
1 ½	180,0	31,8	70,0	48,3	44,0	44,0	83,0	50,6	32,0	16,0	49,5	50,0	
2	215,0	38,1	105,0	60,3	57,0	57,0	102,0	63,5	39,0	17,0	61,9	62,5	
2 ½	245,0	41,3	124,0	73,0	64,0	64,0	105,0	76,2	48,0	19,0	74,6	75,4	
3	265,0	47,7	133,0	88,9	. . .	73,0	117,0	. . .	. . .	. . .	. . .	91,4	
4	310,0	54,0	162,0	114,3	. . .	90,0	124,0	. . .	. . .	. . .	. . .	116,8	To be
5	375,0	73,1	197,0	141,3	. . .	105,0	156,0	. . .	. . .	. . .	. . .	144,4	specified
6	395,0	82,6	229,0	168,3	. . .	119,0	171,0	. . .	. . .	. . .	. . .	171,4	by
8	485,0	92,1	292,0	219,1	. . .	143,0	213,0	. . .	. . .	. . .	. . .	222,2	purchaser
10	585,0	108,0	368,0	273,0	. . .	178,0	254,0	. . .	. . .	. . .	. . .	277,4	
12	675,0	123,9	451,0	323,8	. . .	219,0	283,0	. . .	. . .	. . .	. . .	328,2	
14	750,0	133,4	495,0	355,6	. . .	241,0	298,0	. . .	. . .	. . .	. . .	360,2	
16	825,0	146,1	552,0	406,4	. . .	260,0	311,0	. . .	. . .	. . .	. . .	411,2	
18	915,0	162,0	597,0	457,0	. . .	276,0	327,0	. . .	. . .	. . .	. . .	462,3	
20	985,0	177,8	641,0	508,0	. . .	292,0	356,0	. . .	. . .	. . .	. . .	514,4	
24	1170,0	203,2	762,0	610,0	. . .	330,0	406,0	. . .	. . .	. . .	. . .	616,0	

NOTE: All dimensions except NPS and bolt diameter are in millimeters. The dimensions B_2 for SW flange equals B for Weld Neck.
(1) the tolerance for E is only applicable for groove depth

CLASS 1500 FLANGES

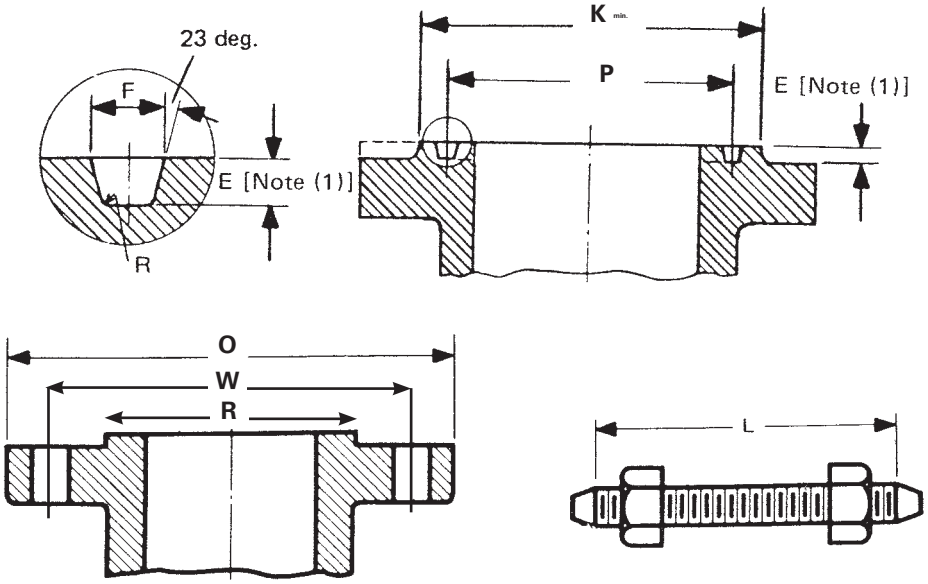

Stud Bolt With Nuts

DIMENSIONS OF CLASS 1500 FLANGES (mm)

15	16	17	18	19	20	21	22	23	24	25	26	27	28	29
	RF dimensions		RTJ dimensions						Bolt hole drilling				Stud bolt length	
Nominal Pipe Size	OD	Height	OD	Height	Groove number	Groove Pitch	Groove Depth	Groove Width	Bolt Circle	Bolt hole	No of bolts	Bolt diam.	7.0 mm RF	Ring Joint
NPS	R		K	E		P	E	F	W	Bh			L	L
1/2	34,9	7,0	60,5	6,35	R12	39,67	6,35	8,74	82,6	22,2	4	3/4	110,0	110,0
3/4	42,9	7,0	66,5	6,35	R14	44,45	6,35	8,74	88,9	22,2	4	3/4	115,0	115,0
1	50,8	7,0	71,5	6,35	R16	50,80	6,35	8,74	101,6	25,4	4	7/8	125,0	125,0
1 ¼	63,5	7,0	81,0	6,35	R18	60,33	6,35	8,74	111,1	25,4	4	7/8	125,0	125,0
1 ½	73,0	7,0	92,0	6,35	R20	68,27	6,35	8,74	123,8	28,6	4	1	140,0	140,0
2	92,1	7,0	124,0	7,92	R24	95,25	7,92	11,91	165,1	25,4	8	7/8	145,0	145,0
2 ½	104,8	7,0	137,0	7,92	R27	107,95	7,92	11,91	190,5	28,6	8	1	160,0	160,0
3	127,0	7,0	168,0	7,92	R35	136,53	7,92	11,91	203,2	31,8	8	1 ⅛	180,0	180,0
4	157,2	7,0	194,0	7,92	R39	161,93	7,92	11,91	241,3	34,9	8	1 ¼	195,0	195,0
5	185,7	7,0	229,0	7,92	R44	193,68	7,92	11,91	292,1	41,3	8	1 ½	250,0	250,0
6	215,9	7,0	248,0	9,53	R46	211,14	9,53	13,49	317,5	38,1	12	1 ⅜	260,0	265,0
8	269,9	7,0	318,0	11,13	R50	269,88	11,13	16,66	393,7	44,5	12	1 ⅝	290,0	325,0
10	323,8	7,0	371,0	11,13	R54	323,85	11,13	16,66	482,6	50,8	12	1 ⅞	335,0	345,0
12	381,0	7,0	438,0	14,27	R58	381,00	14,27	23,01	571,5	54,0	16	2	375,0	385,0
14	412,8	7,0	489,0	15,88	R63	419,10	15,88	26,97	635,0	60,3	16	2 ¼	405,0	425,0
16	469,9	7,0	546,0	17,48	R67	469,90	17,48	30,18	704,8	66,7	16	2 ½	445,0	470,0
18	533,4	7,0	613,0	17,48	R71	533,40	17,48	30,18	774,7	73,0	16	2 ¾	495,0	525,0
20	584,2	7,0	673,0	17,48	R75	584,20	17,48	33,32	831,8	79,4	16	3	540,0	565,0
24	692,2	7,0	794,0	20,62	R79	692,15	20,62	36,53	990,6	92,1	16	3 ½	615,0	650,0

NOTE: All dimensions except NPS and bolt diameter are in millimeters. The dimensions B_2 for SW flange equals B for Weld Neck.
(1) the tolerance for E is only applicable for groove depth

CLASS 2500 FLANGES

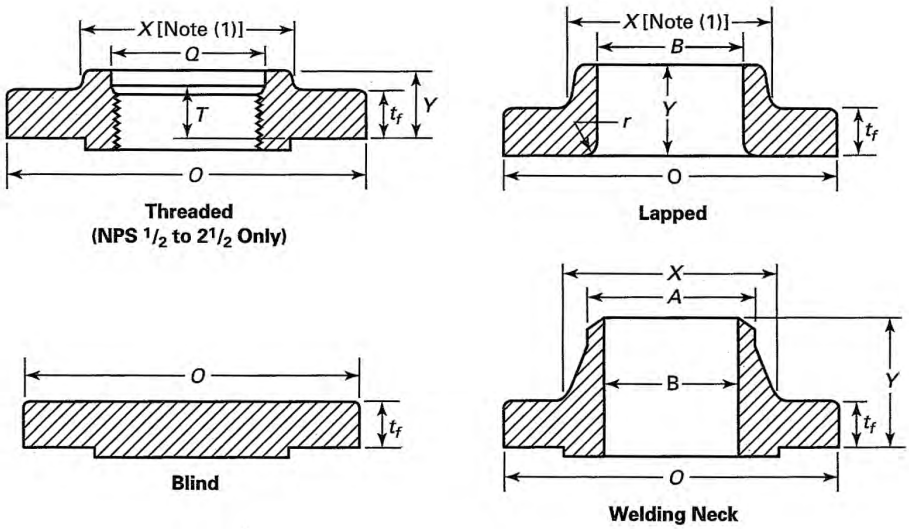

DIMENSIONS OF CLASS 2500 FLANGES (mm)

1	2	3	4	5	6	7	8	9	10	11	12	13	14
	Flange dimensions		HUB dimensions		Length Through HUB			Threaded flange		SW	Bore		
Nominal Pipe Size	OD flange	Thickn.	Large end	Small end	Thr.	Lapped	Weld neck	Counter bore	Thread length	Socket depth	Slip-On, SW	Lapped	Weld neck
NPS	O	tf min.	X	A	Y	Y	Y	Q min.	T min.	D	B min.	B min.	B
1/2	135,0	30,2	43,0	21,3	40,0	40,0	73,0	23,6	29,0	. . .	. . .	22,9	
3/4	140,0	31,8	51,0	26,7	43,0	43,0	79,0	29,0	32,0	. . .	. . .	28,2	
1	160,0	35,0	57,0	33,4	48,0	48,0	89,0	35,8	35,0	. . .	. . .	34,9	
1 ¼	185,0	38,1	73,0	42,2	52,0	52,0	95,0	44,4	39,0	. . .	. . .	43,7	
1 ½	205,0	44,5	79,0	48,3	60,0	60,0	111,0	50,6	45,0	. . .	. . .	50,0	
2	235,0	50,9	95,0	60,3	70,0	70,0	127,0	63,5	51,0	. . .	. . .	62,5	
2 ½	265,0	57,2	114,0	73,0	79,0	79,0	143,0	76,2	58,0	. . .	. . .	75,4	
3	305,0	66,7	133,0	88,9	. . .	92,0	168,0	. . .	. . .	. . .	. . .	91,4	
4	355,0	76,2	165,0	114,3	. . .	108,0	190,0	. . .	. . .	. . .	. . .	116,8	To be
5	420,0	92,1	203,0	141,3	. . .	130,0	229,0	. . .	. . .	. . .	. . .	144,4	specified
6	485,0	108,0	235,0	168,3	. . .	152,0	273,0	. . .	. . .	. . .	. . .	171,4	by
8	550,0	127,0	305,0	219,1	. . .	178,0	318,0	. . .	. . .	. . .	. . .	222,2	purchaser
10	675,0	165,1	375,0	273,0	. . .	229,0	419,0	. . .	. . .	. . .	. . .	277,4	
12	760,0	184,2	441,0	323,8	. . .	254,0	464,0	. . .	. . .	. . .	. . .	328,2	

NOTE: All dimensions except NPS and bolt diameter are in millimeters.
(1) the tolerance for E is only applicable for groove depth

CLASS 2500 FLANGES

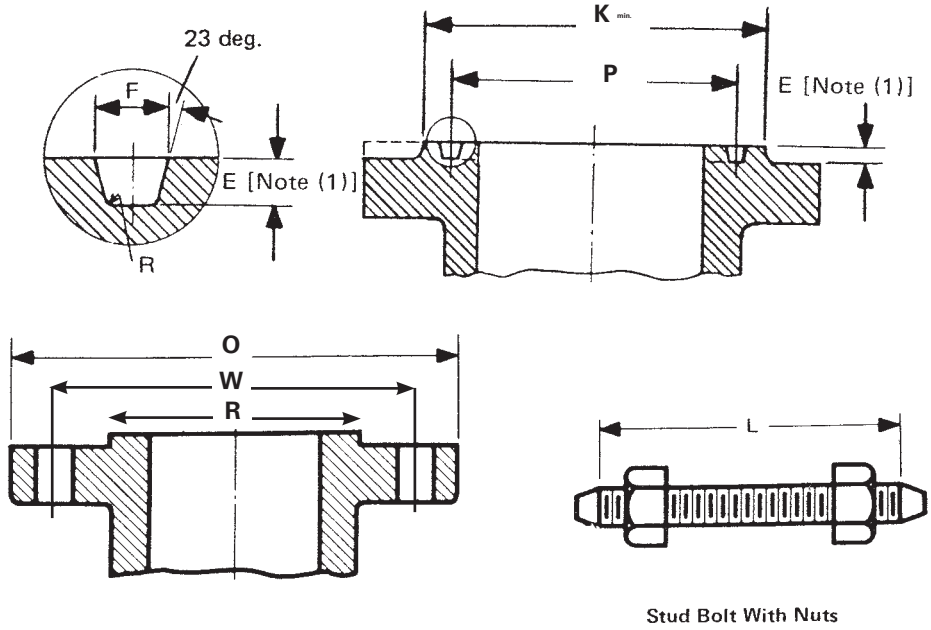

DIMENSIONS OF CLASS 2500 FLANGES (mm)

15	16	17	18	19	20	21	22	23	24	25	26	27	28	29
	RF dimensions		RTJ dimensions						Bolt hole drilling				Stud bolt length	
Nominal Pipe Size	OD	Height	OD	Height	Groove number	Groove Pitch	Groove Depth	Groove Width	Bolt Circle	Bolt hole	No of bolts	Bolt diam.	7,0 mm RF	Ring Joint
NPS	R		K	E		P	E	F	W	Bh			L	L
1/2	34,9	7,0	65,0	6,35	R13	42,88	6,35	8,74	88,9	22,2	4	3/4	120,0	120,0
3/4	42,9	7,0	73,0	6,35	R16	50,80	6,35	8,74	95,2	22,2	4	3/4	125,0	125,0
1	50,8	7,0	82,5	6,35	R18	60,33	6,35	8,74	108,0	25,4	4	7/8	140,0	140,0
1 ¼	63,5	7,0	102,0	7,92	R21	72,23	7,92	11,91	130,2	28,6	4	1	150,0	150,0
1 ½	73,0	7,0	114,0	7,92	R23	82,55	7,92	11,91	146,0	31,8	4	1 ⅛	170,0	170,0
2	92,1	7,0	133,0	7,92	R26	101,60	7,92	11,91	171,4	28,6	8	1	180,0	180,0
2 ½	104,8	7,0	149,0	9,52	R28	111,13	9,52	13,49	196,8	31,8	8	1 ⅛	195,0	205,0
3	127,0	7,0	168,0	9,53	R32	127,00	9,53	13,49	228,6	34,9	8	1 ¼	220,0	230,0
4	157,2	7,0	203,0	11,13	R38	157,18	11,13	16,66	273,0	41,3	8	1 ½	255,0	260,0
5	185,7	7,0	241,0	12,70	R42	190,50	12,70	19,84	323,8	47,6	8	1 ¾	300,0	310,0
6	215,9	7,0	279,0	12,70	R47	228,60	12,70	19,84	368,3	54,0	8	2	345,0	355,0
8	269,9	7,0	340,0	14,27	R51	279,40	14,27	23,01	438,2	54,0	12	2	380,0	395,0
10	323,8	7,0	425,0	17,48	R55	342,90	17,48	30,18	539,8	66,7	12	2 ½	490,0	510,0
12	381,0	7,0	495,0	17,48	R60	406,40	17,48	33,32	619,1	73,0	12	2 ¾	540,0	560,0

NOTE: All dimensions except NPS and bolt diameter are in millimeters.
(1) the tolerance for E is only applicable for groove depth

Tolerances B16.5 - 2003

DENOMINATION	DESCRIPTION	SIZE RANGE	TOLERANCE
O	Outside diameter flange ring 1)	<= 24″ >= 26″	± 1.6 mm ± 3.2 mm
B	Inside diameter / bore	Weld neck: <= 10″ 12″ - 18″ >= 20″ Slip-on, lap joint, socket weld, threaded <= 10″ >= 12″	 ± 1.0 mm ± 1.5 mm + 3.0 / -1.5 mm + 1.0 / -0.0 mm + 1.5 / -0.0 mm
A	Diameter small end of HUB / WN end	<= 5″ >= 6″	+ 2.0 / -1.0 mm + 4.0 / -1.0 mm
X	Diameter of HUB base	<= 24″ (dimension X) >= 26″ (dimension X)	+ 1.6 / -0.8 mm + 3.2 / -0.8 mm
W	Drilling and facing	Bolt circle diameter Center to center adjacent bolt holes Max eccentricity between bolt circle diameter and machining facing diameter: <= 2 1/2″ >= 3″	± 1.5 mm ± 0.8 mm 0.8 mm 1.5 mm
Y	Overall HUB length of WN flanges	<= 4″ 5″ - 10″ >= 12″	± 1.5 mm + 1.5 / -3.0 mm + 3.0 / -5.0 mm
tf	Thickness of flange ring	<= 18″ >= 20″	+ 3.0 / -0.0 mm + 5.0 / -0.0 mm
E	Groove depth	Applicable for groove depth only	+ 0.4 / -0.0 mm
F	Groove width		± 0.2 mm
P	Groove pitch		± 0.13 mm
K	RTJ raised portion		+ 0.50 / -0.00 mm
R	RF raised portion	2.0 mm RF height 7.0 mm RF height	± 1.0 mm ± 0.5 mm

1) These tolerances are not covered by ANSI B 16.5

MSS SP-44 CLASS 150 FLANGES

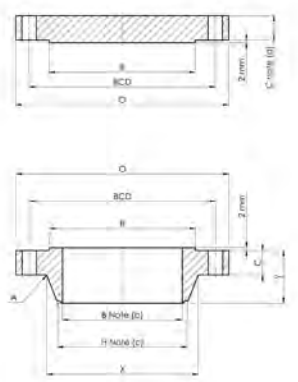

DIMENSIONS FOR MSS SP-44 CLASS 150 FLANGES (mm)

Nominal Pipe size	Flange dim.		Hub dimension		RF dimensions		RTJ dimensions					Bolt hole drilling		
	OD flange O	Thickness C min.	OD Large end X	Length through Y	OD R	Height	OD K	Groove number	Pitch P	Depth L	Width D	Bolt Circle Bc	Bolt Hole Bh	No of bolts
26″	870	66,7	676	119	749,3	2,0	-	-	-	-	-	806,4	35,1	24
28″	925	69,9	727	124	800,1	2,0	-	-	-	-	-	863,6	35,1	28
30″	985	73,1	781	135	857,2	2,0	-	-	-	-	-	914,4	35,1	28
32″	1060	79,4	832	143	914,4	2,0	-	-	-	-	-	977,9	41,2	28
34″	1110	81,0	883	148	965,2	2,0	-	-	-	-	-	1028,7	41,2	32
36″	1170	88,9	933	156	1022,4	2,0	-	-	-	-	-	1085,8	41,2	32
38″	1240	85,8	991	156	1073,2	2,0	-	-	-	-	-	1149,4	41,2	32
40″	1290	88,9	1041	162	1124,0	2,0	-	-	-	-	-	1200,2	41,2	36
42″	1345	95,3	1092	170	1193,8	2,0	-	-	-	-	-	1257,3	41,2	36
44″	1405	100,1	1143	176	1244,6	2,0	-	-	-	-	-	1314,4	41,2	40
46″	1455	101,6	1197	184	1295,4	2,0	-	-	-	-	-	1365,2	41,2	40
48″	1510	106,4	1248	190	1358,9	2,0	-	-	-	-	-	1422,4	41,2	44
50″	1570	109,6	1302	202	1409,7	2,0	-	-	-	-	-	1479,6	47,8	44
52″	1625	114,3	1353	208	1460,5	2,0	-	-	-	-	-	1536,7	47,8	44
54″	1685	119,1	1403	214	1511,3	2,0	-	-	-	-	-	1593,8	47,8	44
56″	1745	122,3	1457	227	1574,8	2,0	-	-	-	-	-	1651,0	47,8	48
58″	1805	127,0	1508	233	1625,6	2,0	-	-	-	-	-	1708,2	47,8	48
60″	1855	130,2	1559	238	1676,4	2,0	-	-	-	-	-	1759,0	47,8	52

NOTES: Bore (B) to be specified by purchacer
OD of HUB at WN end (H) depends on material properties of flange versus joining piping - see section 5.3 of MSS SP-44.

MSS SP-44 CLASS 300 FLANGES

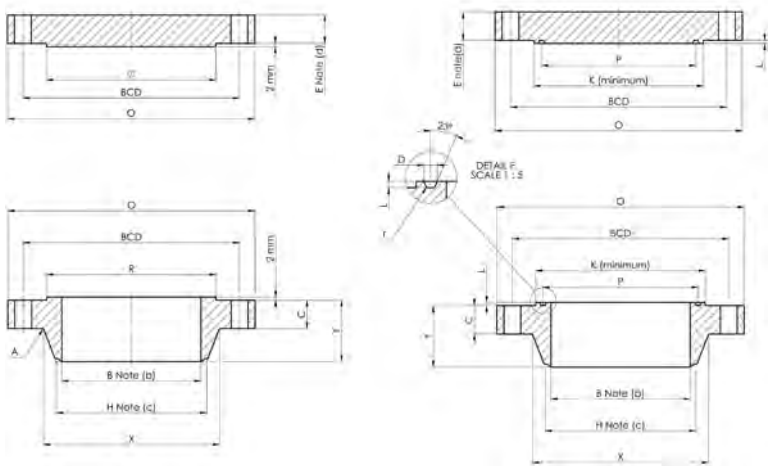

DIMENSIONS FOR MSS SP-44 CLASS 300 FLANGES (mm)

Nominal Pipe size	Flange dimension			Hub dimension		RF dimensions		RTJ dimensions					Bolt hole drilling		
	OD flange O	Thickn. WN C min.	Thickn. Blind E. min	OD Large end X	Length through Y	OD R	Height	OD K	Groove number	Pitch P	Depth L	Width D	Bolt Circle Bc	Bolt Hole Bh	No of bolts
26″	970	77,8	82,6	721	183	749,3	2,0	810	R93	749,3	12,70	19,84	876,3	44,5	28
28″	1035	84,2	88,9	775	195	800,1	2,0	861	R94	800,1	12,70	19,84	939,8	44,5	28
30″	1090	90,5	93,7	827	208	857,2	2,0	917	R95	857,3	12,70	19,84	997,0	47,8	28
32″	1150	96,9	98,5	881	221	914,4	2,0	984	R96	914,4	14,27	23,01	1054,1	50,8	28
34″	1205	100,1	103,2	937	230	965,2	2,0	1035	R97	965,2	14,27	23,01	1104,9	50,8	28
36″	1270	103,2	109,6	991	240	1022,4	2,0	1092	R98	1022,4	14,27	23,01	1168,4	53,9	32
38″	1170	106,4	106,4	994	179	1028,7	2,0	-	-	-	-	-	1092,2	41,2	32
40″	1240	112,8	112,8	1048	192	1085,8	2,0	-	-	-	-	-	1155,7	44,5	32
42″	1290	117,5	117,5	1099	198	1136,6	2,0	-	-	-	-	-	1206,5	44,5	32
44″	1355	122,3	122,3	1149	205	1193,8	2,0	-	-	-	-	-	1263,6	47,8	32
46″	1415	127,0	127,0	1203	214	1244,6	2,0	-	-	-	-	-	1320,8	50,8	28
48″	1465	131,8	131,8	1254	222	1301,8	2,0	-	-	-	-	-	1371,6	50,8	32
50″	1530	138,2	138,2	1305	230	1358,9	2,0	-	-	-	-	-	1428,8	53,9	32
52″	1580	142,9	142,9	1356	237	1409,7	2,0	-	-	-	-	-	1479,6	53,9	32
54″	1660	150,9	150,9	1410	251	1466,8	2,0	-	-	-	-	-	1549,4	60,5	28
56″	1710	152,4	152,4	1464	259	1517,6	2,0	-	-	-	-	-	1600,2	60,5	28
58″	1760	157,2	157,2	1514	265	1574,8	2,0	-	-	-	-	-	1651,0	60,5	32
60″	1810	162,0	162,0	1565	271	1625,6	2,0	-	-	-	-	-	1701,8	60,5	32

NOTES: Bore (B) to be specified by purchacer
OD of HUB at WN end (H) depends on material properties of flange versus joining piping - see section 5.3 of MSS SP-44.

MSS SP-44 CLASS 400 FLANGES

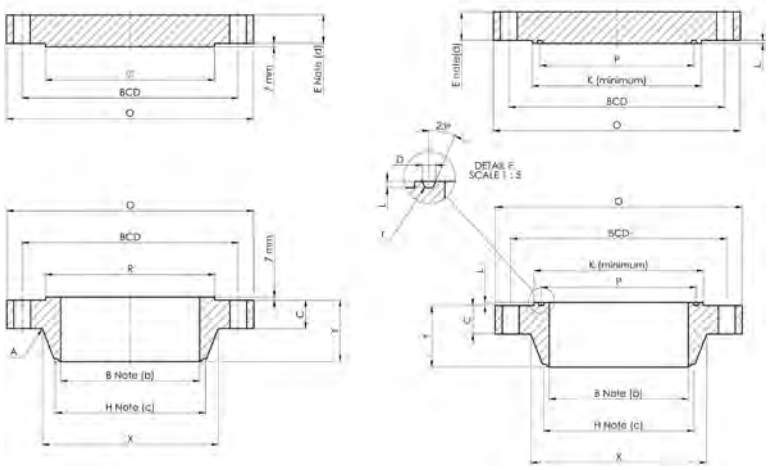

DIMENSIONS FOR MSS SP-44 CLASS 400 FLANGES (mm)

Nominal Pipe size	Flange dimension			Hub dimension		RF dimensions		RTJ dimensions					Bolt hole drilling		
	OD flange O	Thickn. WN C min.	Thickn. Blind E. min	OD Large end X	Length through Y	OD R	Height	OD K	Groove number	Pitch P	Depth L	Width D	Bolt Circle Bc	Bolt Hole Bh	No of bolts
26″	970	88,9	98,5	727	194	749,3	7,0	810	R93	749,3	12,70	19,84	876,3	47,8	28
28″	1035	95,3	104,8	783	206	800,1	7,0	861	R94	800,1	12,70	19,84	939,8	50,8	28
30″	1090	101,6	111,2	837	219	857,2	7,0	917	R95	857,3	12,70	19,84	997,0	53,9	28
32″	1150	108,0	115,9	889	232	914,4	7,0	984	R96	914,4	14,27	23,01	1054,1	53,9	28
34″	1205	111,2	122,3	945	241	965,2	7,0	1035	R97	965,2	14,27	23,01	1104,9	53,9	28
36″	1270	114,3	128,6	1000	251	1022,4	7,0	1092	R98	1022,4	14,27	23,01	1168,4	53,9	32
38″	1205	123,9	123,9	1003	206	1035,0	7,0	-	-	-	-	-	1117,6	47,8	32
40″	1270	130,2	130,2	1054	216	1092,2	7,0	-	-	-	-	-	1174,8	50,8	32
42″	1320	133,4	133,4	1108	224	1143,0	7,0	-	-	-	-	-	1225,6	50,8	32
44″	1385	139,7	139,7	1159	233	1200,2	7,0	-	-	-	-	-	1282,7	53,9	32
46″	1440	146,1	146,1	1213	244	1257,3	7,0	-	-	-	-	-	1339,8	53,9	36
48″	1510	152,4	152,4	1267	257	1308,1	7,0	-	-	-	-	-	1403,4	60,5	28
50″	1570	157,2	158,8	1321	268	1362,1	7,0	-	-	-	-	-	1460,5	60,5	32
52″	1620	162,0	163,6	1372	276	1412,9	7,0	-	-	-	-	-	1511,3	60,5	32
54″	1700	169,9	171,5	1426	289	1470,0	7,0	-	-	-	-	-	1581,2	66,6	28
56″	1755	174,7	176,3	1480	298	1527,2	7,0	-	-	-	-	-	1632,0	66,6	32
58″	1805	177,8	181,0	1530	306	1578,0	7,0	-	-	-	-	-	1682,8	60,6	32
60″	1885	185,8	189,0	1584	319	1635,1	7,0	-	-	-	-	-	1752,6	73,2	32

NOTES: Bore (B) to be specified by purchacer
OD of HUB at WN end (H) depends on material properties of flange versus joining piping - see section 5.3 of MSS SP-44.

MSS SP-44 CLASS 600 FLANGES

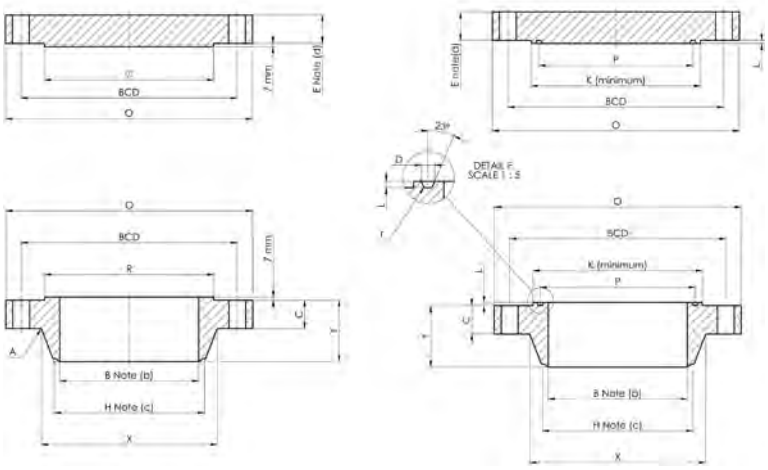

DIMENSIONS FOR MSS SP-44 CLASS 600 FLANGES (mm)

Nominal Pipe size	Flange dimension			Hub dimension		RF dimensions		RTJ dimensions					Bolt hole drilling		
	OD flange O	Thickn. WN C min.	Thickn. Blind E. min	OD Large end X	Length through Y	OD R	Height	OD K	Groove number	Pitch P	Depth L	Width D	Bolt Circle Bc	Bolt Hole Bh	No of bolts
26″	1015	108,0	125,5	748	222	749,3	7,0	810	R93	749,3	12,70	19,84	914,4	50,8	28
28″	1075	111,2	131,8	803	235	800,1	7,0	861	R94	800,1	12,70	19,84	965,2	53,9	28
30″	1130	114,3	139,7	862	248	857,2	7,0	917	R95	857,3	12,70	19,84	1022,4	53,9	28
32″	1195	117,5	147,7	918	260	914,4	7,0	984	R96	914,4	14,27	23,01	1079,5	60,5	28
34″	1245	120,7	154,0	973	270	965,2	7,0	1035	R97	965,2	14,27	23,01	1130,3	60,5	28
36″	1315	123,9	162,0	1032	283	1022,4	7,0	1092	R98	1022,4	14,27	23,01	1193,8	66,6	28
38″	1270	152,4	155,6	1022	254	1054,1	7,0	-	-	-	-	-	1162,0	60,5	28
40″	1320	158,8	162,0	1073	264	1111,2	7,0	-	-	-	-	-	1212,8	60,5	32
42″	1405	168,3	171,5	1127	279	1168,4	7,0	-	-	-	-	-	1282,7	66,6	28
44″	1455	173,1	177,8	1181	289	1225,6	7,0	-	-	-	-	-	1333,5	66,6	32
46″	1510	179,4	185,8	1235	300	1276,4	7,0	-	-	-	-	-	1390,6	66,6	32
48″	1595	189,0	195,3	1289	316	1333,5	7,0	-	-	-	-	-	1460,5	73,2	32
50″	1670	196,9	203,2	1343	329	1384,3	7,0	-	-	-	-	-	1524,0	79,3	28
52″	1720	203,2	209,6	1394	337	1435,1	7,0	-	-	-	-	-	1574,8	79,3	32
54″	1780	209,6	217,5	1448	349	1492,2	7,0	-	-	-	-	-	1632,0	79,3	32
56″	1855	217,5	225,5	1502	362	1543,0	7,0	-	-	-	-	-	1695,4	85,9	32
58″	1905	222,3	231,8	1553	370	1600,2	7,0	-	-	-	-	-	1746,2	85,9	32
60″	1995	233,4	242,9	1610	389	1657,4	7,0	-	-	-	-	-	1822,4	92,0	28

NOTES: Bore (B) to be specified by purchacer
OD of HUB at WN end (H) depends on material properties of flange versus joining piping - see section 5.3 of MSS SP-44.

MSS SP-44 CLASS 900 FLANGES

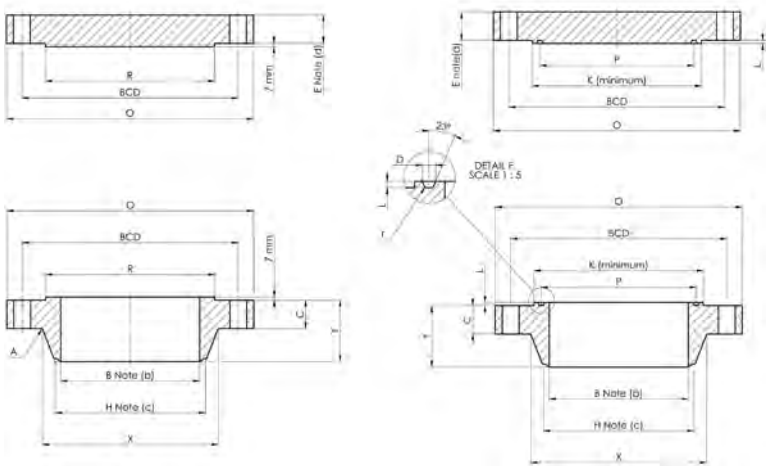

DIMENSIONS FOR MSS SP-44 CLASS 900 FLANGES (mm)

Nominal Pipe size	Flange dimension			Hub dimension		RF dimensions		RTJ dimensions					Bolt hole drilling		
	OD flange O	Thickn. WN C min.	Thickn. Blind E. min	OD Large end X	Length through Y	OD R	Height	OD K	Groove number	Pitch P	Depth L	Width D	Bolt Circle Bc	Bolt Hole Bh	No of bolts
26″	1085	139,7	160,4	775	286	749,3	7,0	832	R100	749,3	17,48	30,18	952,5	73,2	20
28″	1170	142,9	171,5	832	298	800,1	7,0	889	R101	800,1	17,48	33,32	1022,4	79,3	20
30″	1230	149,3	182,6	889	311	857,2	7,0	946	R102	857,3	17,48	33,32	1085,8	79,3	20
32″	1315	158,8	193,7	946	330	914,4	7,0	1003	R103	914,4	17,48	33,32	1155,7	85,9	20
34″	1395	165,1	204,8	1006	349	965,2	7,0	1067	R104	965,2	20,62	36,52	1225,6	92,0	20
36″	1460	171,5	214,4	1064	362	1022,4	7,0	1124	R105	1022,4	20,62	36,52	1289,0	92,0	20
38″	1460	190,5	215,9	1073	352	1098,6	7,0	-	-	-	-	-	1289,0	92,0	20
40″	1510	196,9	223,9	1127	364	1162,8	7,0	-	-	-	-	-	1339,8	92,0	24
42″	1560	206,4	231,8	1176	371	1212,8	7,0	-	-	-	-	-	1390,6	92,0	24
44″	1650	214,4	242,9	1235	391	1270,0	7,0	-	-	-	-	-	1463,7	98,6	24
46″	1735	225,5	255,6	1292	411	1333,5	7,0	-	-	-	-	-	1536,7	104,7	24
48″	1785	233,4	263,6	1343	419	1384,3	7,0	-	-	-	-	-	1587,5	104,7	24

NOTES: Bore (B) to be specified by purchacer
OD of HUB at WN end (H) depends on material properties of flange versus joining piping - see section 5.3 of MSS SP-44.

TOLERANCES MSS SP-44 - 2006

Denomination	Description	Size range	Tolerance
O	Outside diameter flange ring - note 1	(>= 26”)	±3.2 mm
B	Inside diameter / bore	(>=20”)	+ 3.0 / -1.5 mm
H	Diameter small end of HUB / WN end	(>= 26”)	+ 5.0 / -1.5 mm
X	Diameter of HUB base - note 1	(>= 26” dimension X)	+ 3.2 / -0.8 mm
	Drilling and facing	Bolt circle diameter	±1.5 mm
		Center to center adjacent bolt holes	±0.8 mm
		Max eccentricity between bolt circle diam. and machining facing diameter	2.0 mm
Y	Overall HUB length	(>= 26”)	±5.0 mm
C or E	Thickness of flange ring	(>=20”)	+ 5.0 / -0.0 mm
L	Groove depth - note 2	Applicable for groove depth only	+ 0.4 / -0.0 mm
D	Groove width - note 2		±0.2 mm
P	Groove pitch - note 2		±0.13
K	RTJ raised portion - note 2		+ 0.50 / -0.00 mm
R	RF raised portion	2.0 mm RF height (>=26”) 7.0 mm RF height (>=26”)	±2.0 mm ± 1.0 mm

NOTES: 1) These tolerances are not covered by MSS SP-44, and are for guidance only.
2) These tolerances are not covered by MSS SP-44 - taken from ASME B16.5.

API 6A - type 6B flanges

Weld neck, Threaded and Integral flanges are available in 2000, 3000 and 5000 psi rating

TYPE 6B WELD NECK FLANGES - 5000PSI

Nominal size	Nom. bore	Max bore	OD flange	Raised face OD	Total thickn.	Basic thickn. diam.	Large HUB diam.	Small HUB	HUB length	OD bolt circle	No. of bolts	Bolt diam.	Bolt hole diam.	Stud bolt length	Ring number	Pitch of groove	Width of groove	Depth of groove
(inch)		JL	OD	K	T	Q	X	HL	LN	BC		(inch)		Lssb	R/ RX	P	F	E
2 1/16	52	43,7	215	124	46,1	38,1	104,8	60,3	109,5	165,1	8	7/8	26	150	24	95,25	11,91	7,9
2 9/16	65	54,9	245	137	49,3	41,3	123,8	73,0	112,7	190,5	8	1	29	165	27	107,95	11,91	7,9
3 1/8	79	67,5	265	168	55,6	47,7	133,3	88,9	125,4	203,2	8	1 1/8	32	185	35	136,53	11,91	7,9
4 1/16	103	88,1	310	194	62,0	54,0	161,9	114,3	131,8	241,3	8	1 1/4	35	205	39	161,93	11,91	7,9
5 1/8	130	110,3	375	229	81,0	73,1	196,8	141,3	163,5	292,1	8	1 1/2	42	255	44	193,68	11,91	7,9
7 1/16	178	132,6	395	248	92,1	82,6	228,6	168,3	181,0	317,5	12	1 3/8	39	275	46	211,15	13,49	9,7
9	228	173,8	485	318	103,2	92,1	292,1	219,1	223,8	393,7	12	1 5/8	45	305	50	269,88	16,66	11,2
11	279	216,7	585	371	119,1	108	368,3	273,1	265,1	482,6	12	1 7/8	51	350	54	323,85	16,66	11,2

NOTE: All dimensions except NPS and bolt diameter in millimeters

TOLERANCES:

OD	2 1/16 to 5 1/8	+/- 2mm
OD	7 1/16 to 11	+/- 3mm
LN		+/- 1.6mm
HL	2 1/16 to 5 1/8	+2.3/ -0.8mm
HL	7 1/16 to 11	+4.0/ -0.8mm
T		+3/ -0mm
K		/-0mm
Q		/-0mm
Bolt holes	2 1/16 to 7 1/16	+2.0/ -0.5mm
Bolt holes	9 to 11	+2.5/ -0.5mm
P		+/-0.13mm
F		+/-0.20mm
E		+0.5/-0mm
All other dimension - as X.X		+/-0.5mm
All other dimension - as X.XX		+/-0.1mm

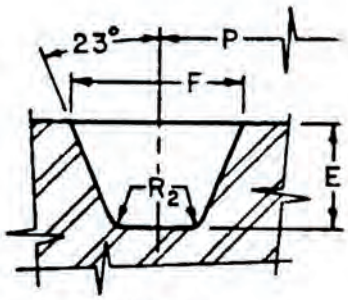

GROOVE

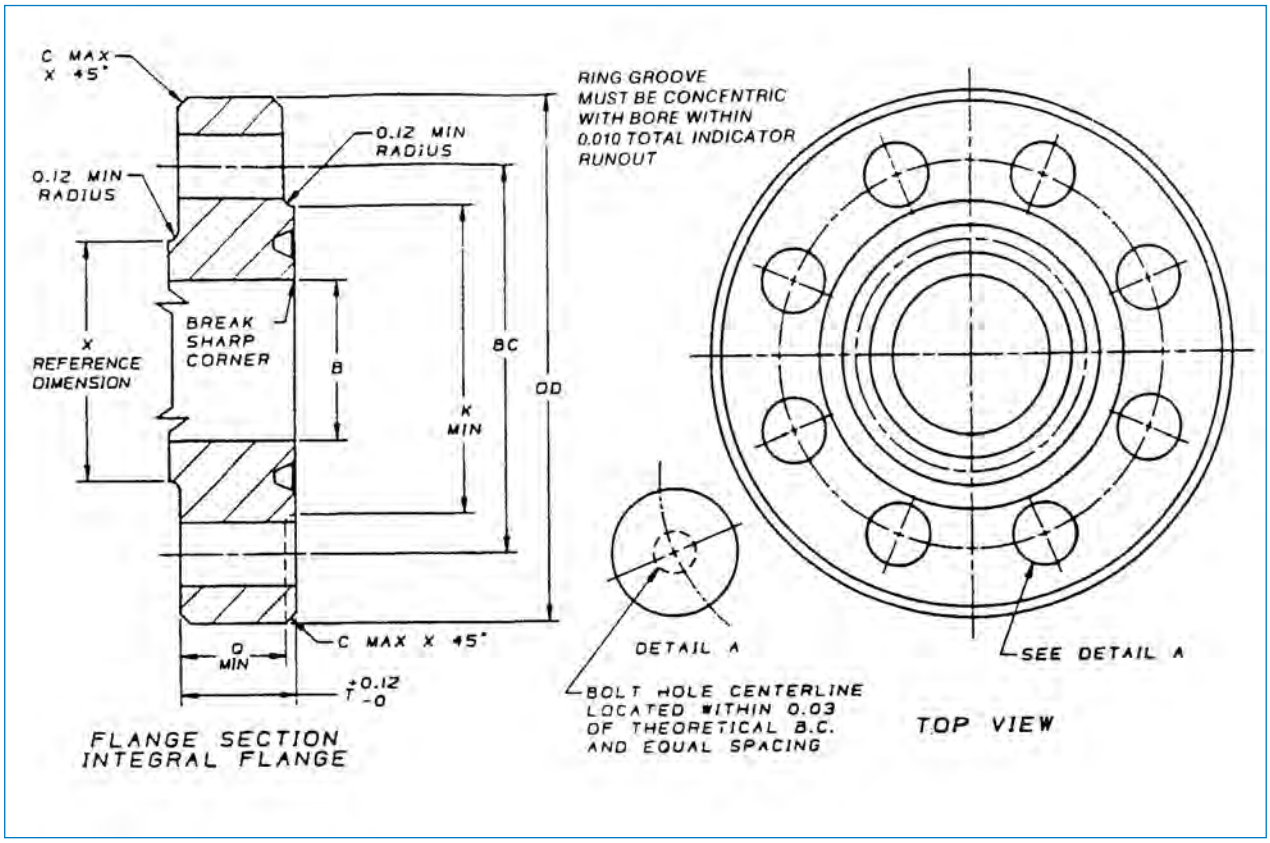
C MAX X 45°
0.12 MIN RADIUS
0.12 MIN RADIUS
BREAK SHARP CORNER
X REFERENCE DIMENSION
B
BC
OD
K MIN
O MIN
C MAX X 45°
T +0.12 -0
FLANGE SECTION INTEGRAL FLANGE
RING GROOVE MUST BE CONCENTRIC WITH BORE WITHIN 0.010 TOTAL INDICATOR RUNOUT
DETAIL A
SEE DETAIL A
BOLT HOLE CENTERLINE LOCATED WITHIN 0.03 OF THEORETICAL B.C. AND EQUAL SPACING
TOP VIEW

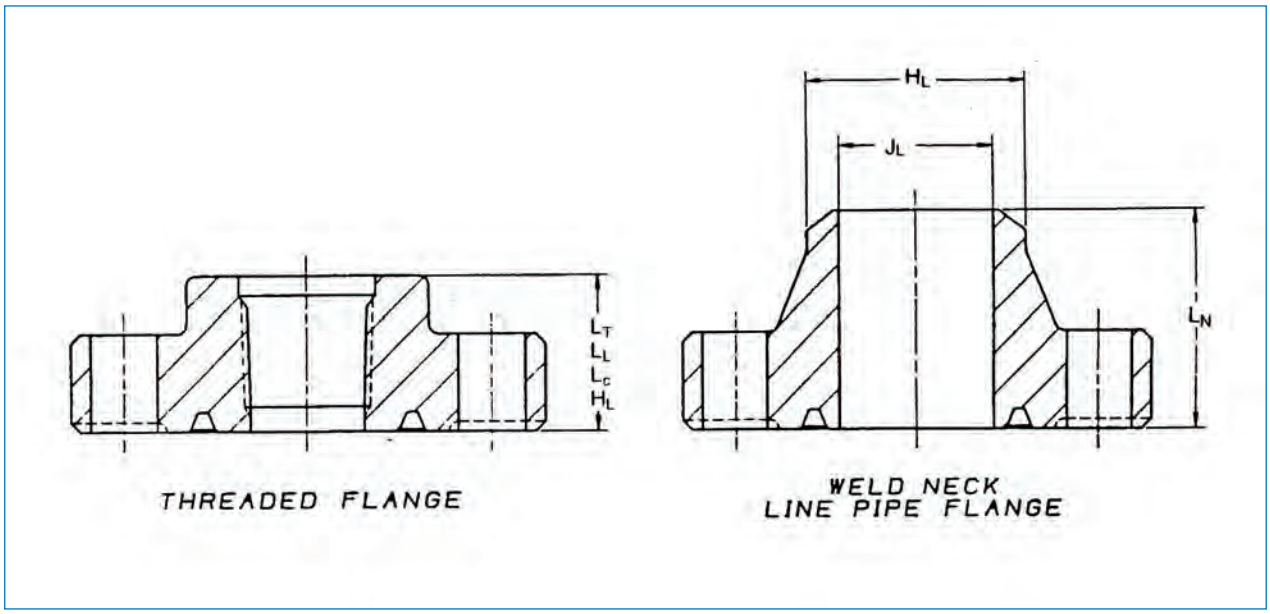
LT
LL
LC
HL
THREADED FLANGE
HL
JL
LN
WELD NECK LINE PIPE FLANGE

API 6A - type 6BX flanges

Weld neck, Blind and Test flanges are available in 10.000, 15.000 and 20.000 psi rating
Integral flanges are available in 2000, 3000, 5000, 10.000, 15.000 and 20.000 psi rating

TYPE 6BX WELD NECK FLANGES - 10.000/15.000/20.000 PSI

Nominal size	Nom. bore	Max bore	OD flange	Raised face OD	Total thickn.	Large HUB diam.	Small HUB diam.	HUB length	OD bolt circle	No. of bolts	Bolt diam.	Bolt hole diam.	Stud bolt length	Ring number	OD of groove	Width of groove	Depth of groove
(inch)	B	B	OD	K	T	J1	J2	J3	BC		(inch)		Lssb	BX	G	N	E
				10.000 psi													
1 13/16	46	46,8	185	105	42,1	88,9	65,1	48,4	146,0	8	3/4	23	125	151	77,77	11,84	5,56
2 1/16	52	53,2	200	111	44,1	100,0	74,6	51,6	158,8	8	3/4	23	135	152	86,23	12,65	5,95
2 9/16	65	65,9	230	132	51,2	120,7	92,1	57,2	184,2	8	7/8	26	150	153	102,77	14,07	6,75
3 1/16	78	78,6	270	152	58,4	142,1	110,3	63,5	215,9	8	1	29	170	154	119,00	15,39	7,54
4 1/16	103	104,0	315	185	70,3	182,6	146,1	73,0	258,8	8	1 1/8	32	205	155	150,62	17,73	8,33
5 1/8	130	131,0	360	221	79,4	223,8	182,6	81,0	300,0	12	1 1/8	32	220	169	176,66	16,92	9,53
7 1/16	179	180,2	480	302	103,2	301,6	254,0	95,2	403,2	12	1 1/2	42	285	156	241,83	23,39	11,11
9	228	229,4	550	359	123,9	374,7	327,1	93,7	476,2	16	1 1/2	42	330	157	299,06	26,39	12,70
11	279	280,2	655	429	141,3	450,9	400,1	103,2	565,2	16	1 3/4	48	380	158	357,23	29,18	14,29
13 5/8	346	346,9	770	518	168,3	552,5	495,3	114,3	673,1	20	1 7/8	51	440	159	432,64	32,49	15,88
16 3/4	425	426,2	870	576	168,3	655,6	601,7	76,2	776,3	24	1 7/8	51	445	162	478,33	17,91	8,33
				15.000 psi													
1 13/16	46	46,8	210	106	45,3	97,6	71,4	47,6	160,3	8	7/8	26	140	151	77,77	11,84	5,56
2 1/16	52	53,2	220	114	50,8	111,1	82,6	54,0	174,6	8	7/8	26	150	152	86,23	12,65	5,95
2 9/16	65	65,9	255	133	57,2	128,6	100,0	57,2	200,0	8	1	29	170	153	102,77	14,07	6,75
3 1/16	78	78,6	290	154	64,3	154,0	122,2	63,5	230,2	8	1 1/8	32	190	154	119,00	15,39	7,54
4 1/16	103	104,0	360	194	78,6	195,3	158,8	73,0	290,5	8	1 3/8	39	235	155	150,62	17,73	8,33
5 1/8	130	131,0	420	225	98,5	244,5	200,0	81,8	342,9	12	1 1/2	42	290	169	176,66	16,92	9,53
7 1/16	179	180,2	505	305	119,1	325,4	276,2	92,1	428,6	16	1 1/2	42	325	156	241,83	23,39	11,11
				20.000 psi													
1 13/16	46	46,8	255	117	63,5	133,4	109,5	49,2	203,2	8	1	29	190	151	77,77	11,84	5,56
2 1/16	52	53,2	285	132	71,5	154,0	127,0	52,4	230,2	8	1 1/8	32	210	152	86,23	12,65	5,95
2 9/16	65	65,9	325	151	79,4	173,0	144,5	58,7	261,9	8	1 1/4	35	235	153	102,77	14,07	6,75
3 1/16	78	78,6	355	171	85,8	192,1	160,3	63,5	287,3	8	1 3/8	39	255	154	119,00	15,39	7,54
4 1/16	103	104,0	445	219	106,4	242,9	206,4	73,0	357,2	8	1 3/4	48	310	155	150,62	17,73	8,33
7 1/16	179	180,2	655	352	165,1	385,8	338,1	96,8	554,0	16	2	54	445	156	241,83	23,39	11,11

NOTE: All dimensions except NPS and bolt diameter in millimeters

TOLERANCES:

OD	1 13/16 to 5 1/8	+/- 2mm
OD	7 1/16 to 16 3/4	+/- 3mm
J1		+0/ -3mm
J2		/-0mm
J3		/-0mm
T		+3/ -0mm
K		+/-1.6mm
Bolt holes	1 13/16 to 5 1/8	+2.0/ -0.5mm
Bolt holes	7 1/16 to 16 3/4	+2.5/ -0.5mm
G		+0.1/-0mm
N		+0.1/-0mm
E		+0.5/-0mm
All other dimension - as X.X		+/-0.5mm
All other dimension - as X.XX		+/-0.1mm

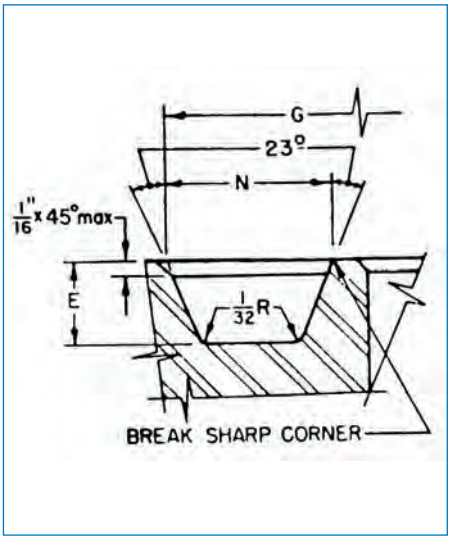

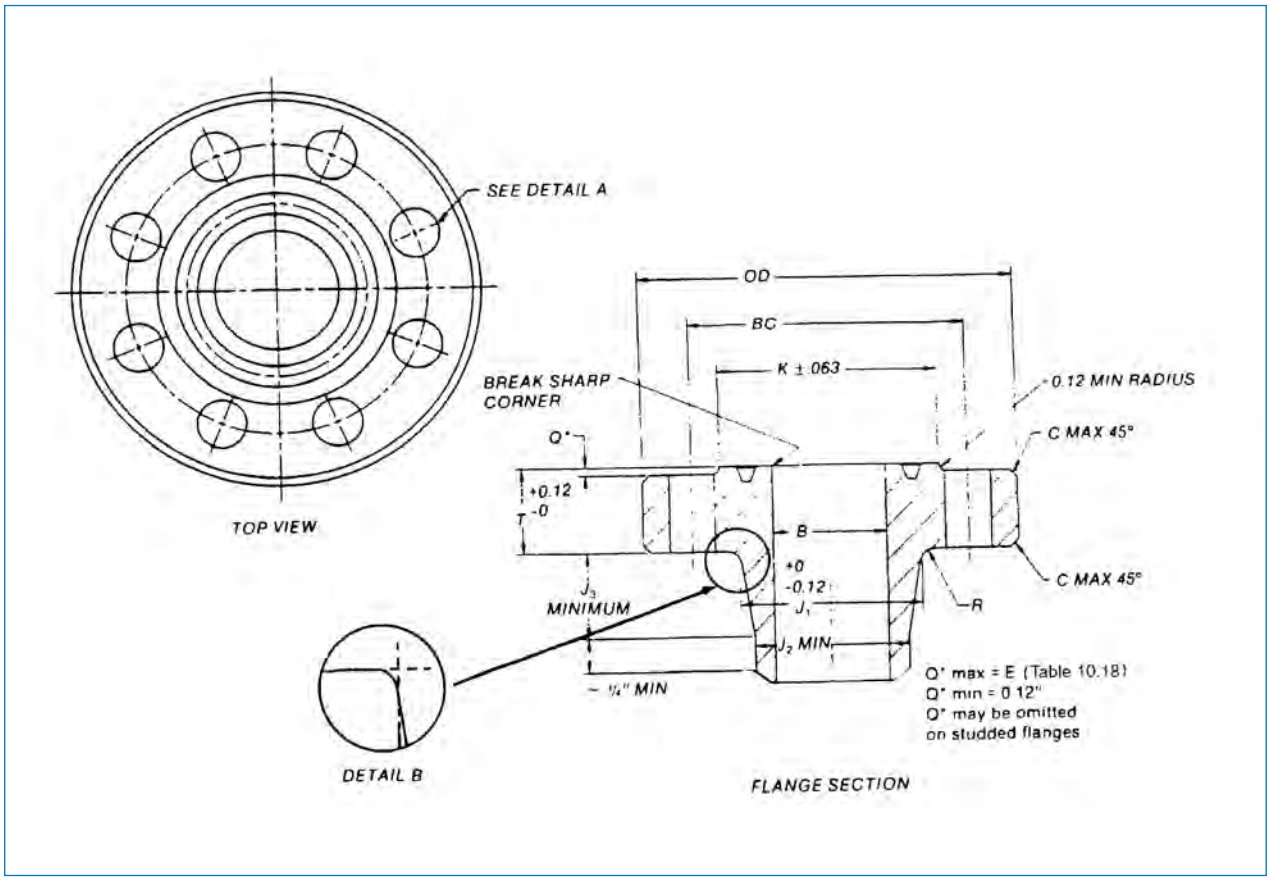
SEE DETAIL A
TOP VIEW
OD
BC
K ± .063
BREAK SHARP CORNER
0.12 MIN RADIUS
C MAX 45°
Q*
+0.12
T -0
B
+0
-0.12
J1
J3 MINIMUM
J2 MIN
R
C MAX 45°
~ ¼" MIN
Q* max = E (Table 10.18)
Q* min = 0.12"
Q* may be omitted on studded flanges
DETAIL B
FLANGE SECTION

HEAD QUARTER:

PHONE:+86-21 3126 2693
FAX:+86-21 3126 2693
Email:sales@pipestec.com,sales@metallictec.com
Address:No.888, Huanhu West No.2
Road,Nanhui,Pudong,
Shanghai,China,201306

www.pipestec.com www.metallictec.com

Copyright © 1994 - 2017 All Rights Reserved.