PIPESTEC

Pipeline Products Specialists

Industry products solutions for a worldwide

Products

Pipe
Flange
Butt Welding Pipe Fittings
Forged Pipe Fittings
Fasteners
Valves
Accessaries

PIPESTEC INDUSTRIAL GROUP LIMITED

www.pipestec.com www.metallictec.com

Copyright © 1994 - 2017 All Rights Reserved.

BUTT-WELD FITTINGS

ASME B 16.9
MSS SP-75
ASME B 16.28
JIS B2311/2316

ELBOWS

45° Long Radius Elbow

90° Long Radius Elbow

180° Long Radius Elbow

90° Short Radius Elbow

TEES

Equal Tee

Reducing Tee

STUB ENDS

ASA Stub End

MSS Stub End

REDUCERS

Concentric Reducer

Eccentric Reducer

CAP

Cap

Pipe Fitting manufacturer **PipesTec** supplies all types of Industrial Pipe Fittings such as bend, cap, Elbow, Reducer, Tee, stub end, weldolet, coupling, etc.

Butt Weld Pipe Fittings

-Type:

45, 90, 180 Deg. Long/Short Radius Elbows, Equal Tees, Reducing Tees, Equal Crosses, Reducing Crosses, Concentric Reducers, Eccentric Reducers, Caps, Barred Tees, etc.

Pipe Bend:Size: 3”-48”

Radius: 3D, 4D, 5D, 6D, 8D, 10D

Angels: 22.5Deg, 30Deg, 45Deg, 60Deg, 90Deg

-Pipe Fitting Standard:

ANSI B16.9, ANSI B16.28, DIN 2605, DIN2615, DIN2616, JIS B2312, JIS B2313

-Pipe Fitting Material:

-Carbon Steel

ASTM A 234 WPB, A420 WPL1, WPL3, WPL6,

ASTM A860 WPHY 42, WPHY52, WPHY60, WPHY65, WPHY70

-Stainless Steel

ASTM A403 WP304/304L, WP316/316L, WP321, WP347

-Alloy Steel

ASTM A234 WP1, WP5, WP9, WP11, WP12, WP22, WP91

-Duplex & Super Duplex Steel

ASTM A815 UNS S31803, UNS S32750, UNS S32760

-Schedule:

-Carbon Steel & Alloy Steel

STD, XS, XXS, SCH10-SCH160

-Stainless Steel

SCH5S, 10S, 40S, 80S

-Pipe Fitting Size:

-Carbon Steel: 1/2”-96”

-Stainless Steel: 1/2” – 24” (Seamless and ERW),
26” – 72” (Welded)

Long radius elbows

90° long radius elbow

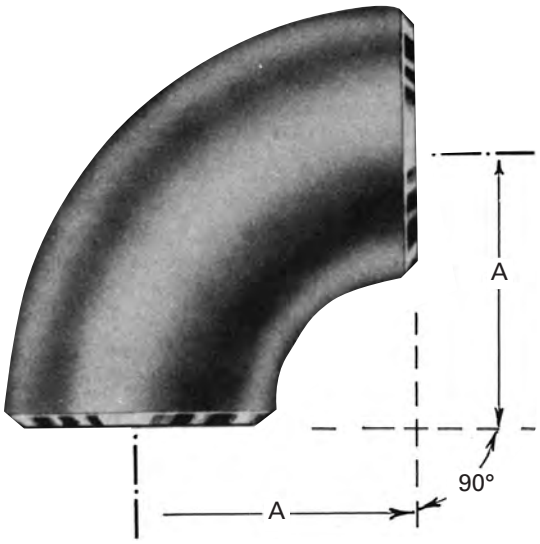

45° long radius elbow

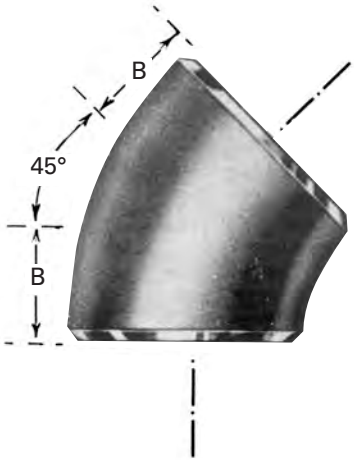

ASME B16.9				MSS SP-75			
N.B.	O.D. at Bevel	A (mm)	B (mm)	N.B.	O.D. at Bevel	A (mm)	B (mm)
1/2	21,3	38	16				
3/4	26,7	38	19				
1	33,4	38	22				
1 ¼	42,2	48	25				
1 ½	48,3	57	29				
2	60,3	76	35				
2 ½	73,0	95	44				
3	88,9	114	51				
3 ½	101,6	133	57				
4	114,3	152	64				
5	141,3	190	79				
6	168,3	229	95				
8	219,1	305	127				
10	273,0	381	159				
12	323,8	457	190				
14	355,6	533	222				
16	406,4	610	254	16	406,4	610	254
18	457,0	686	286	18	457,0	686	286
20	508,0	762	318	20	508,0	762	318
22	559,0	838	343	22	559,0	838	343
24	610,0	914	381	24	610,0	914	381
26	660,0	991	406	26	660,0	991	406
28	711,0	1067	438	28	711,0	1067	438
30	762,0	1143	470	30	762,0	1143	470
32	813,0	1219	502	32	813,0	1219	502
34	864,0	1295	533	34	864,0	1295	533
36	914,0	1372	565	36	914,0	1372	565
38	965,0	1448	600	38	965,0	1448	600
40	1016,0	1524	632	40	1016,0	1524	632
42	1067,0	1600	660	42	1067,0	1600	660
44	1118,0	1676	695	44	1118,0	1676	695
46	1168,0	1753	727	46	1168,0	1753	727
48	1219,0	1829	759	48	1219,0	1829	759

Tees

Equal Tees

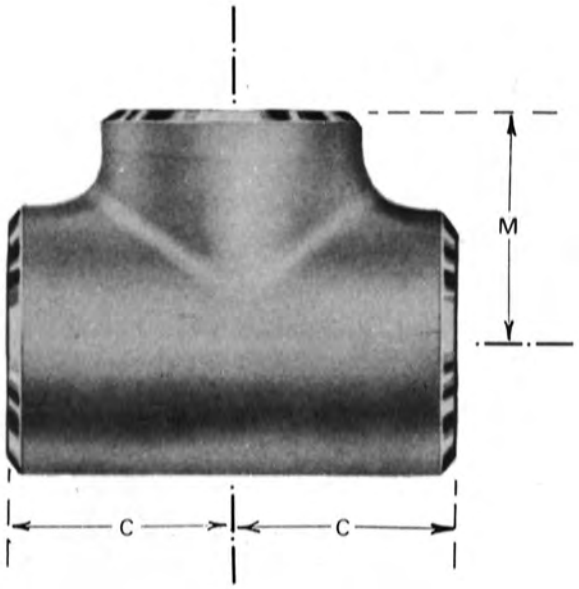

ASME B16.9				MSS SP-75			
N.B.	O.D. at Bevel	C (mm)	M (mm)	N.B.	O.D. at Bevel	C (mm)	M (mm)
1/2	21,3	25	25				
3/4	26,7	29	29				
1	33,4	38	38				
1 ¼	42,2	48	48				
1 ½	48,3	57	57				
2	60,3	64	64				
2 ½	73,0	76	76				
3	88,9	86	86				
3 ½	101,6	95	95				
4	114,3	105	105				
5	141,3	124	124				
6	168,3	143	143				
8	219,1	178	178				
10	273,0	216	216				
12	323,8	254	254				
14	355,6	279	279				
16	406,4	305	305	16	406,4	305	305
18	457,0	343	343	18	457,0	343	343
20	508,0	381	381	20	508,0	381	381
22	559,0	419	419	22	559,0	419	419
24	610,0	432	432	24	610,0	432	432
26	660,0	495	495	26	660,0	495	495
28	711,0	521	521	28	711,0	521	521
30	762,0	559	559	30	762,0	559	559
32	813,0	597	597	32	813,0	597	597
34	864,0	635	635	34	864,0	635	635
36	914,0	673	673	36	914,0	673	673
38	965,0	711	711	38	965,0	711	711
40	1016,0	749	749	40	1016,0	749	749
42	1067,0	762	711	42	1067,0	762	711
44	1118,0	813	762	44	1118,0	813	762
46	1168,0	851	800	46	1168,0	851	800
48	1219,0	889	838	48	1219,0	889	838

Tees

Reducing Outlet Tees

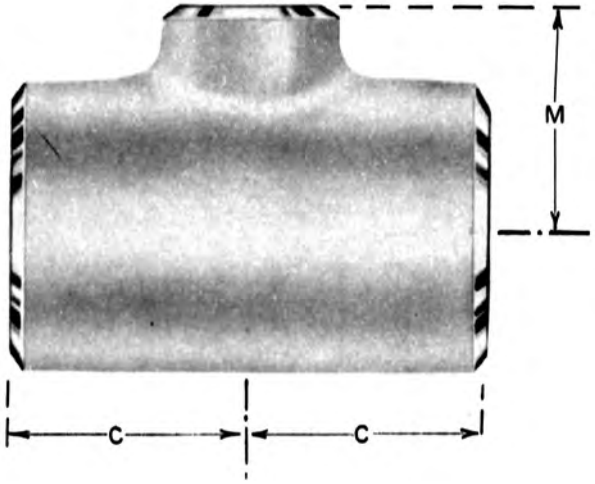

REDUCING OUTLET TEES (dimensions in mm)

ASME B16.9						MSS SP-75					
N.B.		O.D. at Bevel		Run	Outlet	N.B.		O.D. at Bevel		Run	Outlet
Run	Outlet	Run	Outlet	C	M	Run	Outlet	Run	Outlet	C	M
1/2	3/8	21,3	17,3	25	25						
1/2	1/4	21,3	13,7	25	25						
3/4	1/2	26,7	21,3	29	29						
3/4	3/8	26,7	17,3	29	29						
1	3/4	33,4	26,7	38	38						
1	1/2	33,4	21,3	38	38						
1 ¼	1	42,2	33,4	48	48						
1 ¼	3/4	42,2	26,7	48	48						
1 ¼	1/2	42,2	21,3	48	48						
1 ½	1 ¼	48,3	42,2	57	57						
1 ½	1	48,3	33,4	57	57						
1 ½	3/4	48,3	26,7	57	57						
1 ½	1/2	48,3	21,3	57	57						
2	1 ½	60,3	48,3	64	60						
2	1 ¼	60,3	42,2	64	57						
2	1	60,3	33,4	64	51						
2	3/4	60,3	26,7	64	44						
2 ½	2	73,0	60,3	76	70						
2 ½	1 ½	73,0	48,3	76	67						
2 ½	1 ¼	73,0	42,2	76	64						
2 ½	1	73,0	33,4	76	57						
3	2 ½	88,9	73,0	86	83						
3	2	88,9	60,3	86	76						
3	1 ½	88,9	48,3	86	73						
3	1 ¼	88,9	42,2	86	70						
3 ½	3	101,6	88,9	95	92						
3 ½	2 ½	101,6	73,0	95	89						
3 ½	2	101,6	60,3	95	83						
3 ½	1 ½	101,6	48,3	95	79						

REDUCING OUTLET TEES (dimensions in mm) – continued

ASME B16.9						MSS SP-75					
N.B.		O.D. at Bevel		Run	Outlet	N.B.		O.D. at Bevel		Run	Outlet
Run	Outlet	Run	Outlet	C	M	Run	Outlet	Run	Outlet	C	M
4	3 ½	114,3	101,6	105	102						
4	3	114,3	88,9	105	98						
4	2 ½	114,3	73,0	105	95						
4	2	114,3	60,3	105	89						
4	1 ½	114,3	48,3	105	86						
5	4	141,3	114,3	124	117						
5	3 ½	141,3	101,6	124	114						
5	3	141,3	88,9	124	111						
5	2 ½	141,3	73,0	124	108						
5	2	141,3	60,3	124	105						
6	5	168,3	141,3	143	137						
6	4	168,3	114,3	143	130						
6	3 ½	168,3	101,6	143	127						
6	3	168,3	88,9	143	124						
6	2 ½	168,3	73,0	143	121						
8	6	219,1	168,3	178	168						
8	5	219,1	141,3	178	162						
8	4	219,1	114,3	178	156						
8	3 ½	219,1	101,6	178	152						
10	8	273,0	219,1	216	203						
10	6	273,0	168,3	216	194						
10	5	273,0	141,3	216	191						
10	4	273,0	114,3	216	184						
12	10	323,8	273,0	254	241						
12	8	323,8	219,1	254	229						
12	6	323,8	168,3	254	219						
12	5	323,8	141,3	254	216						
14	12	355,6	323,8	279	270						
14	10	355,6	273,1	279	257						
14	8	355,6	219,1	279	248						
14	6	355,6	168,3	279	238						
16	14	406,4	355,6	305	305	16	14	406,4	355,6	305	305
16	12	406,4	323,8	305	295	16	12	406,4	323,8	305	295
16	10	406,4	273,0	305	283	16	10	406,4	273,0	305	283
16	8	406,4	219,1	305	273	16	8	406,4	219,1	305	273
16	6	406,4	168,3	305	264	16	6	406,4	168,3	305	264
18	16	457	406,4	343	330	18	16	457	406,4	343	330
18	14	457	355,6	343	330	18	14	457	355,6	343	330
18	12	457	323,8	343	321	18	12	457	323,8	343	321
18	10	457	273,0	343	308	18	10	457	273,0	343	308
18	8	457	219,1	343	298	18	8	457	219,1	343	298
20	18	508	457,0	381	368	20	18	508	475,0	381	368
20	16	508	406,4	381	356	20	16	508	406,4	381	356
20	14	508	355,6	381	356	20	14	508	355,6	381	356
20	12	508	323,8	381	346	20	12	508	323,8	381	346
20	10	508	273,0	381	333	20	10	508	273,0	381	333
20	8	508	219,1	381	324	20	8	508	219,1	381	324
22	20	559	508,0	419	406	22	20	559	508,0	419	406
22	18	559	457,0	419	394	22	18	559	457,0	419	394
22	16	559	406,4	419	381	22	16	559	406,4	419	381
22	14	559	355,6	419	381	22	14	559	355,6	419	381
22	12	559	323,8	419	371	22	12	559	323,8	419	371
22	10	559	273,0	419	359	22	10	559	273,0	419	359
24	22	610	559,0	432	432	24	22	610	559,0	432	432
24	20	610	508,0	432	432	24	20	610	508,0	432	432
24	18	610	457,0	432	419	24	18	610	457,0	432	419
24	16	610	406,4	432	406	24	16	610	406,4	432	406
24	14	610	355,6	432	406	24	14	610	355,6	432	406
24	12	610	323,8	432	397	24	12	610	323,8	432	397
24	10	610	273,0	432	384	24	10	610	273,0	432	384

REDUCING OUTLET TEES (dimensions in mm) – continued

ASME B16.9						MSS SP-75					
N.B.		O.D. at Bevel		Run	Outlet	N.B.		O.D. at Bevel		Run	Outlet
Run	Outlet	Run	Outlet	C	M	Run	Outlet	Run	Outlet	C	M
26	24	660	610,0	495	483	26	24	660	610,0	495	483
26	22	660	559,0	495	470	26	22	660	559,0	495	470
26	20	660	508,0	495	457	26	20	660	508,0	495	457
26	18	660	457,0	495	444	26	18	660	457,0	495	444
26	16	660	406,4	495	432	26	16	660	406,4	495	432
26	14	660	355,6	495	432	26	14	660	355,6	495	432
26	12	660	323,8	495	422	26	12	660	323,8	495	422
28	26	711	660,0	521	521	28	26	711	660,0	521	521
28	24	711	610,0	521	508	28	24	711	610,0	521	508
28	22	711	559,0	521	495	28	22	711	559,0	521	495
28	20	711	508,0	521	483	28	20	711	508,0	521	483
28	18	711	457,0	521	470	28	18	711	457,0	521	470
28	16	711	406,4	521	457	28	16	711	406,4	521	457
28	14	711	355,6	521	457	28	14	711	355,6	521	457
28	12	711	323,8	521	448	28	12	711	323,8	521	448
30	28	762	711,0	559	546	30	28	762	711,0	559	546
30	26	762	660,0	559	546	30	26	762	660,0	559	546
30	24	762	610,0	559	533	30	24	762	610,0	559	533
30	22	762	559,0	559	521	30	22	762	559,0	559	521
30	20	762	508,0	559	508	30	20	762	508,0	559	508
30	18	762	457,0	559	495	30	18	762	457,0	559	495
30	16	762	406,4	559	483	30	16	762	406,4	559	483
30	14	762	355,6	559	483	30	14	762	355,6	559	483
30	12	762	323,8	559	473	30	12	762	323,8	559	473
30	10	762	273,0	559	460	30	10	762	273,0	559	460
32	30	813	762,0	597	584	32	30	813	762,0	597	584
32	28	813	711,0	597	572	32	28	813	711,0	597	572
32	26	813	660,0	597	572	32	26	813	660,0	597	572
32	24	813	610,0	597	559	32	24	813	610,0	597	559
32	22	813	559,0	597	546	32	22	813	559,0	597	546
32	20	813	508,0	597	533	32	20	813	508,0	597	533
32	18	813	457,0	597	521	32	18	813	457,0	597	521
32	16	813	406,4	597	508	32	16	813	406,4	597	508
32	14	813	355,6	597	508	32	14	813	355,6	597	508
34	32	864	813,0	635	622	34	32	864	813,0	635	622
34	30	864	762,0	635	610	34	30	864	762,0	635	610
34	28	864	711,0	635	597	34	28	864	711,0	635	597
34	26	864	660,0	635	597	34	26	864	660,0	635	597
34	24	864	610,0	635	584	34	24	864	610,0	635	584
34	22	864	559,0	635	572	34	22	864	559,0	635	572
34	20	864	508,0	635	559	34	20	864	508,0	635	559
34	18	864	457,0	635	546	34	18	864	457,0	635	546
34	16	864	406,4	635	533	34	16	864	406,4	635	533
36	34	914	864,0	673	660	36	34	914	864,0	673	660
36	32	914	813,0	673	648	36	32	914	813,0	673	648
36	30	914	762,0	673	635	36	30	914	762,0	673	635
36	28	914	711,0	673	622	36	28	914	711,0	673	622
36	26	914	660,0	673	622	36	26	914	660,0	673	622
36	24	914	610,0	673	610	36	24	914	610,0	673	610
36	22	914	559,0	673	597	36	22	914	559,0	673	597
36	20	914	508,0	673	584	36	20	914	508,0	673	584
36	18	914	457,0	673	572	36	18	914	457,0	673	572
36	16	914	406,4	673	559	36	16	914	406,4	673	559
38	36	965	914,0	711	711	38	36	965	914,0	711	711
38	34	965	864,0	711	698	38	34	965	864,0	711	698
38	32	965	813,0	711	686	38	32	965	813,0	711	686
38	30	965	762,0	711	673	38	30	965	762,0	711	673
38	28	965	711,0	711	648	38	28	965	711,0	711	648
38	26	965	660,0	711	648	38	26	965	660,0	711	648
38	24	965	610,0	711	635	38	24	965	610,0	711	635
38	22	965	559,0	711	622	38	22	965	559,0	711	622
38	20	965	508,0	711	610	38	20	965	508,0	711	610
38	18	965	457,0	711	597	38	18	965	457,0	711	597

REDUCING OUTLET TEES (dimensions in mm) – continued

ASME B16.9						MSS SP-75					
N.B.		O.D. at Bevel		Run	Outlet	N.B.		O.D. at Bevel		Run	Outlet
Run	Outlet	Run	Outlet	C	M	Run	Outlet	Run	Outlet	C	M
40	38	1016	965	749	749	40	38	1016	965	749	749
40	36	1016	914	749	737	40	36	1016	914	749	737
40	34	1016	864	749	724	40	34	1016	864	749	724
40	32	1016	813	749	711	40	32	1016	813	749	711
40	30	1016	762	749	698	40	30	1016	762	749	698
40	28	1016	711	749	673	40	28	1016	711	749	673
40	26	1016	660	749	673	40	26	1016	660	749	673
40	24	1016	610	749	660	40	24	1016	610	749	660
40	22	1016	559	749	648	40	22	1016	559	749	648
40	20	1016	508	749	635	40	20	1016	508	749	635
40	18	1016	457	749	622	40	18	1016	457	749	622
42	40	1067	1016	762	711						
42	38	1067	968	762	711						
42	36	1067	914	762	711	42	36	1067	914	762	711
42	34	1067	864	762	711	42	34	1067	864	762	711
42	32	1067	813	762	711	42	32	1067	813	762	711
42	30	1067	762	762	711	42	30	1067	762	762	711
42	28	1067	711	762	698	42	28	1067	711	762	698
42	26	1067	660	762	698	42	26	1067	660	762	698
42	24	1067	610	762	660	42	24	1067	610	762	660
42	22	1067	559	762	660	42	22	1067	559	762	660
42	20	1067	508	762	660	42	20	1067	508	762	660
42	18	1067	457	762	648	42	18	1067	457	762	648
42	16	1067	406,4	762	635	42	16	1067	406,4	762	635
44	42	1118	1067	813	762	44	42	1118	1067	813	762
44	40	1118	1016	813	749	44	40	1118	1016	813	749
44	38	1118	965	813	737	44	38	1118	965	813	737
44	36	1118	914	813	724	44	36	1118	914	813	724
44	34	1118	864	813	724	44	34	1118	864	813	724
44	32	1118	813	813	711	44	32	1118	813	813	711
44	30	1118	762	813	711	44	30	1118	762	813	711
44	28	1118	711	813	698	44	28	1118	711	813	698
44	26	1118	660	813	698	44	26	1118	660	813	698
44	24	1118	610	813	698	44	24	1118	610	813	698
44	22	1118	559	813	686	44	22	1118	559	813	686
44	20	1118	508	813	686	44	20	1118	508	813	686
46	44	1168	1118	851	800	46	44	1168	1118	851	800
46	42	1168	1067	851	787	46	42	1168	1067	851	787
46	40	1168	1016	851	775	46	40	1168	1016	851	775
46	38	1168	965	851	762	46	38	1168	965	851	762
46	36	1168	914	851	762	46	36	1168	914	851	762
46	34	1168	864	851	749	46	34	1168	864	851	749
46	32	1168	813	851	749	46	32	1168	813	851	749
46	30	1168	762	851	737	46	30	1168	762	851	737
46	28	1168	711	851	737	46	28	1168	711	851	737
46	26	1168	660	851	737	46	26	1168	660	851	737
46	24	1168	610	851	724	46	24	1168	610	851	724
46	22	1168	559	851	724	46	22	1168	559	851	724
48	46	1219	1168	889	838	48	46	1219	1168	889	838
48	44	1219	1118	889	838	48	44	1219	1118	889	838
48	42	1219	1067	889	813	48	42	1219	1067	889	813
48	40	1219	1016	889	813	48	40	1219	1016	889	813
48	38	1219	965	889	813	48	38	1219	965	889	813
48	36	1219	914	889	787	48	36	1219	914	889	787
48	34	1219	864	889	787	48	34	1219	864	889	787
48	32	1219	813	889	787	48	32	1219	813	889	787
48	30	1219	762	889	762	48	30	1219	762	889	762
48	28	1219	711	889	762	48	28	1219	711	889	762
48	26	1219	660	889	762	48	26	1219	660	889	762
48	24	1219	610	889	737	48	24	1219	610	889	737
48	22	1219	559	889	737	48	22	1219	559	889	737

Long Radius Bends

Long Radius Return Bends

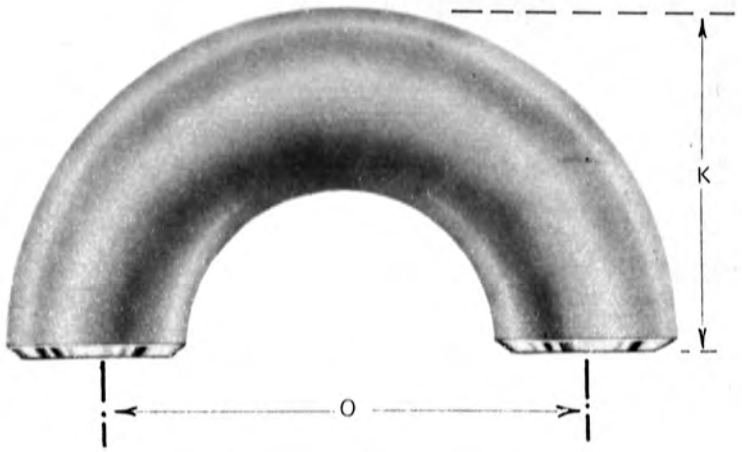

LONG RADIUS RETURN BENDS (dimensions in mm)

ASME B16.9			
N.B.	O.D. at Bevel	O	K
1/2	21,3	76	48
3/4	26,7	76	51
1	33,4	76	56
1 ¼	42,2	95	70
1 ½	48,3	114	83
2	60,3	152	106
2 ½	73,0	190	132
3	88,9	229	159
3 ½	101,6	267	184
4	114,3	305	210
5	141,3	381	262
6	168,3	457	313
8	219,1	610	414
10	273,0	762	518
12	323,8	914	619
14	355,6	1067	711
16	406,4	1219	813
18	457,0	1372	914
20	508,0	1524	1016
22	559,0	1676	1118
24	610,0	1829	1219

Reducers

Concentric and eccentric reducers

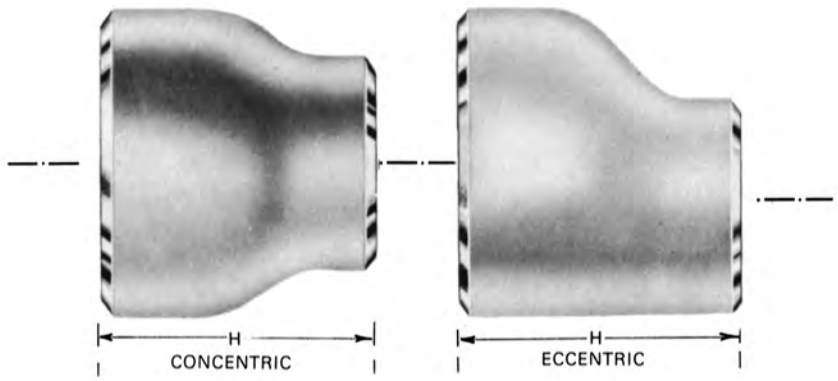

REDUCERS (dimensions in mm)

ASME B16.9					MSS SP-75				
N.B.		O.D. at Bevel			N.B.		O.D. at Bevel		
L.E.	S.E.	L.E.	S.E.	H	L.E.	S.E.	L.E.	S.E.	H
3/4	3/8	26,7	17,3	38					
3/4	1/2	26,7	21,3	38					
1	3/4	33,4	26,7	51					
1	1/2	33,4	21,3	51					
1 ¼	1	42,2	33,4	51					
1 ¼	3/4	42,2	26,7	51					
1 ¼	1/2	42,2	21,3	51					
1 ½	1 ¼	48,3	42,2	64					
1 ½	1	48,3	33,4	64					
1 ½	3/4	48,3	26,7	64					
1 ½	1/2	48,3	21,3	64					
2	1 ½	60,3	48,3	76					
2	1 ¼	60,3	42,2	76					
2	1	60,3	33,4	76					
2	3/4	60,3	26,7	76					
2 ½	2	73,0	60,3	89					
2 ½	1 ½	73,0	48,3	89					
2 ½	1 ¼	73,0	42,2	89					
2 ½	1	73,0	33,4	89					
3	2 ½	88,9	73,0	89					
3	2	88,9	60,3	89					
3	1 ½	88,9	48,3	89					
3	1 ¼	88,9	42,2	89					
3 ½	3	101,6	88,9	102					
3 ½	2 ½	101,6	73,0	102					
3 ½	2	101,6	60,3	102					
3 ½	1 ½	101,6	48,3	102					
3 ½	1 ¼	101,6	42,2	102					
4	3 ½	114,3	101,6	102					
4	3	114,3	88,9	102					
4	2 ½	114,3	73,0	102					
4	2	114,3	60,3	102					
4	1 ½	114,3	48,3	102					
5	4	141,3	114,3	127					
5	3 ½	141,3	101,6	127					
5	3	141,3	88,9	127					
5	2 ½	141,3	73,0	127					
5	2	141,3	60,3	127					
6	5	168,3	141,3	140					
6	4	168,3	114,3	140					
6	3 ½	168,3	101,6	140					
6	3	168,3	88,9	140					
6	2 ½	168,3	73,0	140					
8	6	219,1	168,3	152					
8	5	219,1	141,3	152					
8	4	219,1	114,3	152					
8	3 ½	219,1	101,6	152					
10	8	273,0	219,1	178					
10	6	273,0	168,3	178					
10	5	273,0	141,3	178					
10	4	273,0	114,3	178					
12	10	323,8	273,0	203					
12	8	323,8	219,1	203					
12	6	323,8	168,3	203					
12	5	323,8	141,3	203					
14	12	355,6	323,8	330					
14	10	355,6	273,0	330					
14	8	355,6	219,1	330					
14	6	355,6	168,3	330					
16	14	406,4	355,6	356	16	14	406,4	355,6	356
16	12	406,4	323,8	356	16	12	406,4	323,8	356
16	10	406,4	273,0	356	16	10	406,4	273,0	356
16	8	406,4	219,1	356	16	8	406,4	219,1	356
18	16	457,2	406,4	381	18	16	457,2	406,4	381
18	14	457,0	355,6	381	18	14	457,0	355,6	381
18	12	457,0	323,8	381	18	12	457,0	323,8	381
18	10	457,0	273,0	381	18	10	457,0	273,0	381

NOTE: LE = Large End
SE = Small End

REDUCERS (dimensions in mm) - continued

ASME B16.9					MSS SP-75				
N.B.		O.D. at Bevel			N.B.		O.D. at Bevel		
L.E.	S.E.	L.E.	S.E.	H	L.E.	S.E.	L.E.	S.E.	H
20	18	508	457	508	20	18	508	457	508
20	16	508	406,4	508	20	16	508	406,4	508
20	14	508	355,6	508	20	14	508	355,6	508
20	12	508	323,8	508	20	12	508	323,8	508
22	20	559	508	508	22	20	559	508	508
22	18	559	457	508	22	18	559	457	508
22	16	559	406,4	508	22	16	559	406,4	508
22	14	559	355,6	508	22	14	559	355,6	508
24	22	610	559	508	24	22	610	559	508
24	20	610	508	508	24	20	610	508	508
24	18	610	457	508	24	18	610	457	508
24	16	610	406,4	508	24	16	610	406,4	508
26	24	660	610	610	26	24	660	610	610
26	22	660	559	610	26	22	660	559	610
26	20	660	508	610	26	20	660	508	610
26	18	660	457	610	26	18	660	457	610
28	26	711	660	610	28	26	711	660	610
28	24	711	610	610	28	24	711	610	610
					28	22	711	559	610
28	20	711	508	610	28	20	711	508	610
28	18	711	457	610	28	18	711	457	610
30	28	762	711	610	30	28	762	711	610
30	26	762	660	610	30	26	762	660	610
30	24	762	610	610	30	24	762	610	610
					30	22	762	559	610
30	20	762	508	610	30	20	762	508	610
32	30	813	762	610	32	30	813	762	610
32	28	813	711	610	32	28	813	711	610
32	26	813	660	610	32	26	813	660	610
32	24	813	610	610	32	24	813	610	610
34	32	864	813	610	34	32	864	813	610
34	30	864	762	610	34	30	864	762	610
					34	28	864	711	
34	26	864	660	610	34	26	864	660	610
34	24	864	610	610	34	24	864	610	610
36	34	914	864	610	36	34	914	864	610
36	32	914	813	610	36	32	914	813	610
36	30	914	762	610	36	30	914	762	610
					36	28	914	711	610
36	26	914	660	610	36	26	914	660	610
36	24	914	610	610	36	24	914	610	610
38	36	965	914	610	38	36	965	914	610
38	34	965	864	610	38	34	965	864	610
38	32	965	813	610	38	32	965	813	610
38	30	965	762	610	38	30	965	762	610
38	28	965	711	610	38	28	965	711	610
38	26	965	660	610	38	26	965	660	610
					38	24	965	610	610
					38	22	965	559	610
					38	20	965	508	610

ASME B16.9					MSS SP-75				
N.B.		O.D. at Bevel			N.B.		O.D. at Bevel		
L.E.	S.E.	L.E.	S.E.	H	L.E.	S.E.	L.E.	S.E.	H
40	38	1016	965	610	40	38	1016	965	610
40	36	1016	914	610	40	36	1016	914	610
40	34	1016	864	610	40	34	1016	864	610
40	32	1016	813	610	40	32	1016	813	610
40	30	1016	762	610	40	30	1016	762	610
					40	28	1016	711	610
					40	26	1016	660	610
					40	24	1016	610	610
					40	22	1016	559	610
					40	20	1016	508	610
42	40	1067	1016	610	42	40	1067	1016	610
42	38	1067	965	610	42	38	1067	965	610
42	36	1067	914	610	42	36	1067	914	610
42	34	1067	864	610	42	34	1067	864	610
42	32	1067	813	610	42	32	1067	813	610
42	30	1067	762	610	42	30	1067	762	610
					42	28	1067	711	610
					42	26	1067	660	610
					42	24	1067	610	610
					42	22	1067	559	610
44	42	1118	1067	610	44	42	1118	1067	610
44	40	1118	1016	610	44	40	1118	1016	610
44	38	1118	965	610	44	38	1118	965	610
44	36	1118	914	610	44	36	1118	914	610
					44	34	1118	864	610
					44	32	1118	813	610
					44	30	1118	762	610
					44	28	1118	711	610
					44	26	1118	660	610
					44	24	1118	610	610
					44	22	1118	559	610
46	44	1168	1118	711	46	44	1168	1118	711
46	42	1168	1067	711	46	42	1168	1067	711
46	40	1168	1016	711	46	40	1168	1016	711
46	38	1168	965	711	46	38	1168	965	711
					46	36	1168	914	711
					46	34	1168	864	711
					46	32	1168	813	711
					46	30	1168	762	711
					46	28	1168	711	711
					46	26	1168	660	711
					46	24	1168	610	711
48	46	1219	1168	711	48	46	1219	1168	711
48	44	1219	1118	711	48	44	1219	1118	711
48	42	1219	1067	711	48	42	1219	1067	711
48	40	1219	1016	711	48	40	1219	1016	711
					48	38	1219	965	711
					48	36	1219	914	711
					48	34	1219	864	711
					48	32	1219	813	711
					48	30	1219	762	711
					48	28	1219	711	711
					48	26	1219	660	711
					48	24	1219	610	711

NOTE: LE = Large End
SE = Small End

Stub Ends

Lap-Joint Stub Ends

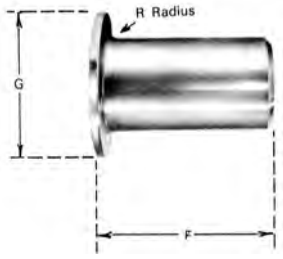

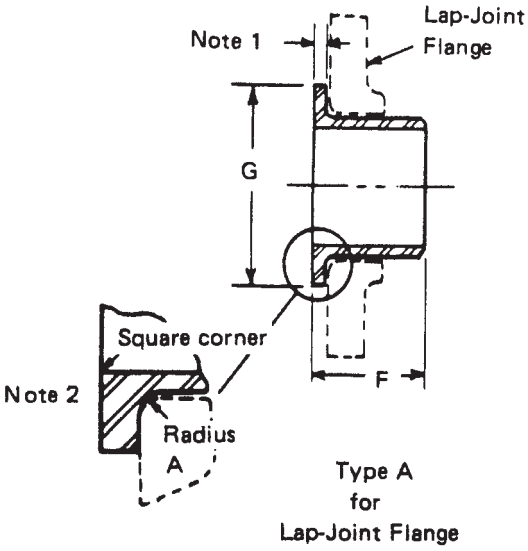

LAP-JOINT STUB ENDS (dimensions in mm)

ASME B16.9 - long type							ASME B16.9 - Short type / MSS SP 43 Type A						
N.B.	O.D. at Bevel	F	RAD. of Fillet R	DIA. of Lap G	O.D. of Barrel		N.B.	O.D. at Bevel	F	RAD. of Fillet R	DIA. of Lap G	O.D. of Barrel	
					Max.	Min.						Max.	Min.
1/2	21,3	76	3	35	22,8	20,5	1/2	21,3	51	3	35	22,8	20,5
3/4	26,7	76	3	43	28,1	25,9	3/4	26,7	51	3	43	28,1	25,9
1	33,4	102	3	51	35,0	32,6	1	33,4	51	3	51	35,0	32,6
1 ¼	42,2	102	5	64	43,6	41,4	1¼	42,2	51	5	64	43,6	41,4
1 ½	48,3	102	6	73	49,9	47,5	1½	48,3	51	6	73	49,9	47,5
2	60,3	152	8	92	62,4	59,5	2	60,3	64	8	92	62,4	59,5
2 ½	73,0	152	8	105	75,3	72,2	2½	73,0	64	8	105	75,3	72,2
3	88,9	152	10	127	91,3	88,1	3	88,9	64	10	127	91,3	88,1
3 ½	101,6	152	10	140	104,0	100,8	3½	101,6	76	10	140	104,0	100,8
4	114,3	152	11	157	116,7	113,5	4	114,3	76	11	157	116,7	113,5
5	141,3	203	11	186	144,3	140,5	5	141,3	76	11	186	144,3	140,5
6	168,3	203	13	216	171,3	167,5	6	168,3	89	13	216	171,3	167,5
8	219,1	203	13	270	222,1	218,3	8	219,1	102	13	270	222,1	218,3
10	273,0	254	13	324	277,2	272,3	10	273,0	127	13	324	277,2	272,3
12	323,8	254	13	381	328,0	323,1	12	323,8	152	13	381	328,0	323,1
14	355,6	305	13	413	359,9	354,8	14	355,6	152	13	413	359,9	354,8
16	406,4	305	13	470	411,0	405,6	16	406,4	152	13	470	411,0	405,6
18	457,0	305	13	533	462,0	456,0	18	457,0	152	13	533	462,0	456,0
20	508,0	305	13	584	514,0	507,0	20	508,0	152	13	584	514,0	507,0
22	559,0	305	13	641	565,0	558,0	22	559,0	152	13	641	565,0	558,0
24	610,0	305	13	692	616,0	609,0	24	610,0	152	13	692	616,0	609,0

When used with the higher pressure flanges, it may be necessary to increase the length of stub ends in sizes 12in and larger. Such increase in length shall be a matter of agreement between the manufacturer and purchaser.

R – These dimensions conform to the radius established for lap-joint flanges in American National Standard Steel Pipe Flanges and Flanged Fittings ANSI B16.5.

G – The dimension conform to standard machined facings shown in the Americam National Standard Steel Pipe Flanges and Flanged Fittings ANSI B16.5. The back face of the lap shall be machined to conform to the surface on which it seats. Where ring joint facings are to be applied use dimension ´K´ as given in ANSI B16.5.

F – When special facings such as tongoue-groove, male-female, etc. are employed, additional lap thickness must be provided and such additional thickness shall be in addition to (not included in) the basic length ´F´´.

End Caps

END CAPS (dimensions in mm)

ASME B16.9					MSS SP-75				
N.B.	O.D. at Bevel	# E	Limiting W.T. for Length E	3 E_1	N.B.	O.D. at Bevel	# E	Limiting W.T. for Length E	E_1
1/2	21,3	25	4,57	25					
3/4	26,7	25	3,81	25					
1	33,4	38	4,57	38					
1 ¼	42,2	38	4,83	38					
1 ½	48,3	38	5,08	38					
2	60,3	38	5,59	44					
2 ½	73,0	38	7,11	51					
3	88,9	51	7,62	64					
3 ½	101,6	64	8,13	76					
4	114,3	64	8,64	76					
5	141,3	76	9,65	89					
6	168,3	89	10,92	102					
8	219,1	102	12,70	127					
10	273,0	127	12,70	152					
12	323,8	152	12,70	178					
14	355,6	165	12,70	191					
16	406,4	178	12,70	203	16	406,4	178	25,4	203
18	457	203	12,70	229	18	457	203	25,4	229
20	508	229	12,70	254	20	508	229	25,4	254
22	559	254	12,70	254	22	559	254	25,4	279
24	610	267	12,70	305	24	610	267	25,4	305
26	660	267	–	–	26	660	267	25,4	305
28	711	267	–	–	28	711	267	25,4	305
30	762	267	–	–	30	762	267	25,4	305
32	813	267	–	–	32	813	267	25,4	305
34	864	267	–	–	34	864	267	25,4	305
36	914	267	–	–	36	914	267	25,4	305
38	965	305	–	–	38	965	305	25,4	343
40	1016	305	–	–	40	1016	305	25,4	343
42	1067	305	–	–	42	1067	305	25,4	343
44	1118	343	–	–	44	1118	343	25,4	381
46	1168	343	–	–	46	1168	343	25,4	381
48	1219	343	–	–	48	1219	343	25,4	381

*The shape of these caps shall be ellipsoidal and shall conform to the shape requirements as given in ASME Boiler and Pressure Vessel Code.
#Length E applies for thickness not exceeding that given in column "Limiting Wall Thickness for Length E".
*3 Length E1, applies for thickness greater than that given in column "Limiting Wall Thickness" for sizes 24in. and smaller.
For type B16.9 sizes 26in. and larger the length E1, shall be by agreement between manufacturer and purchaser.

Short radius elbows

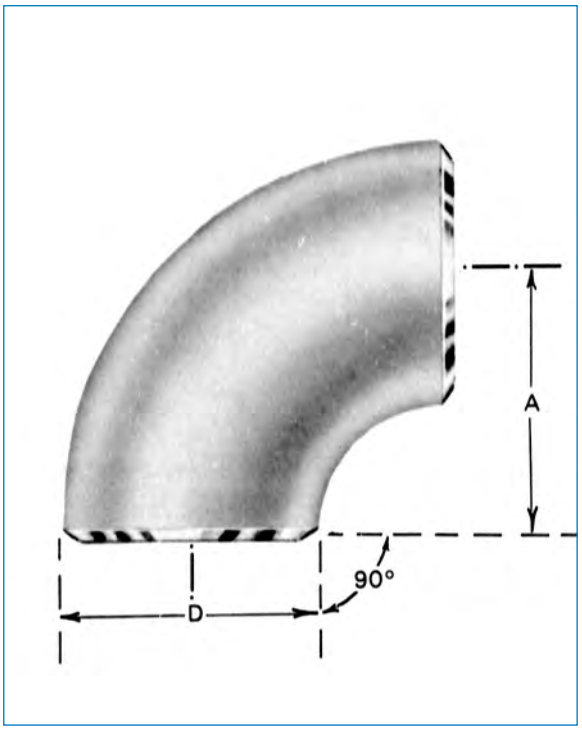

ASME B16.28 [mm]						
N.B. (inch)	O.D. at Bevel - D			Center to End dim. - A		
	Min.	Nom.	Max.	Min.	Nom.	Max.
1	32	33	34	23	25	27
1 ¼	41	42	43	30	32	34
1 ½	47	48	49	36	38	40
2	59	60	61	49	51	53
2 ½	72	73	74	62	64	66
3	88	89	90	74	76	78
3 ½	101	102	103	87	89	91
4	113	114	116	100	102	104
5	140	141	144	125	127	129
6	167	168	171	150	152	154
8	217	219	221	201	203	205
10	270	273	277	252	254	256
12	321	324	328	302	305	308
14	353	356	360	353	356	359
16	403	406	410	403	406	409
18	454	457	461	454	457	460
20	503	508	514	505	508	511
22	554	559	565	556	559	562
24	605	610	616	607	610	613

Short radius 180° returns

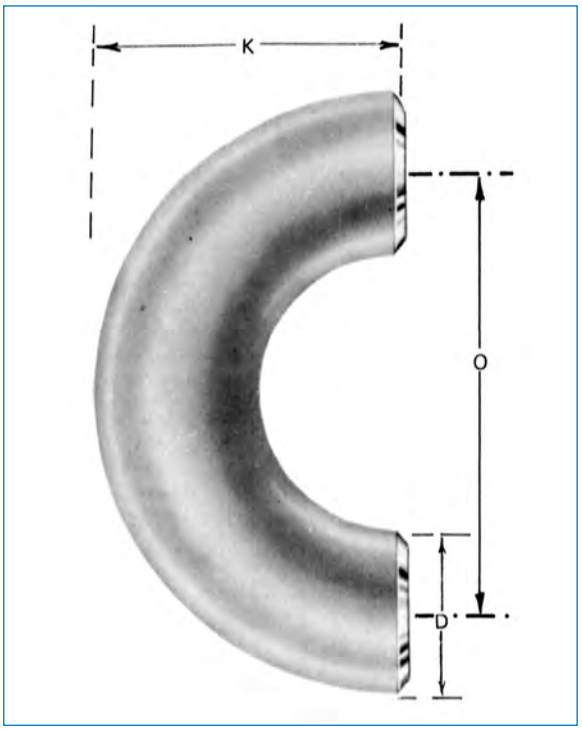

ASME B16.28 [mm]									
N.B. (inch)	O.D. at Bevel - D			Center to Center - O			Back to Bevel Face - K		
	Min.	Nom.	Max.	Min.	Nom.	Max.	Min.	Nom.	Max.
1	32	33	34	44	51	58	34	41	48
1 ¼	41	42	43	57	64	71	45	52	59
1 ½	47	48	49	69	76	83	55	62	69
2	59	60	61	95	102	109	74	81	88
2 ½	72	73	74	120	127	134	93	100	107
3	88	89	90	145	152	159	114	121	128
3 ½	101	102	103	171	178	185	133	140	147
4	113	114	116	196	203	210	152	159	166
5	140	141	144	247	254	261	190	197	204
6	167	168	171	298	305	312	230	237	244
8	217	219	221	399	406	413	306	313	320
10	270	273	277	498	508	518	384	391	398
12	321	324	328	600	610	620	460	467	474
14	353	356	360	701	711	721	526	533	540
16	403	406	410	803	813	823	603	610	617
18	454	457	461	904	914	924	679	686	693
20	503	508	514	1006	1016	1026	755	762	769
22	554	559	565	1108	1118	1128	831	838	845
24	605	610	616	1209	1219	1229	907	914	921

Bevel types

Welding Bevel For Fittings – MSS SP – 75 (mm)

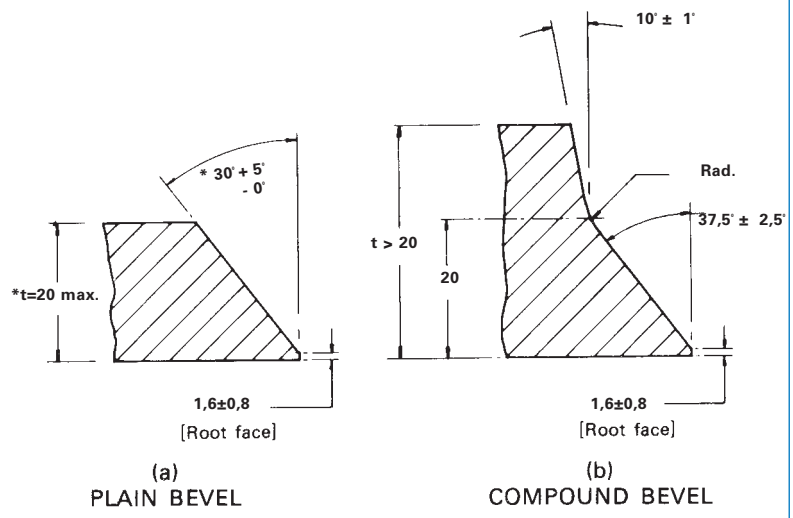

*NOTE: Plain bevel up to t ≤ 25,4 mm at manufacturers option.
Plain bevel may be 37,5° up to ≤ 24" at manufacturers option.

Welding Bevel For Fittings – ANSI B16.9/B16.28 (mm)

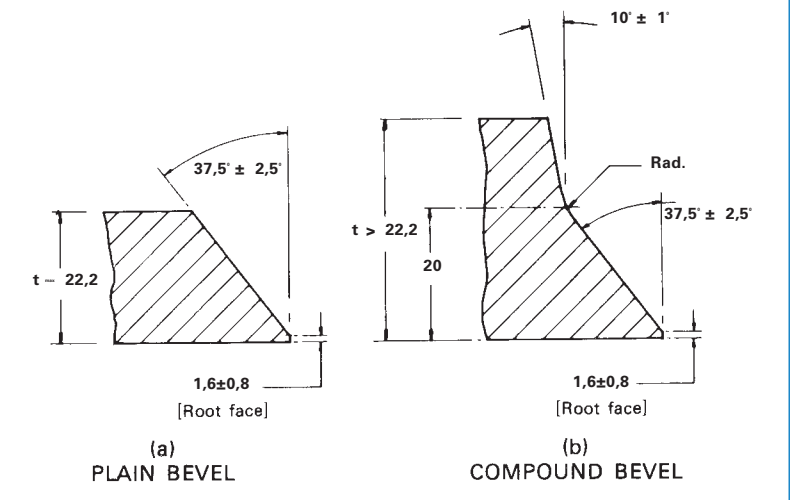

Tolerances

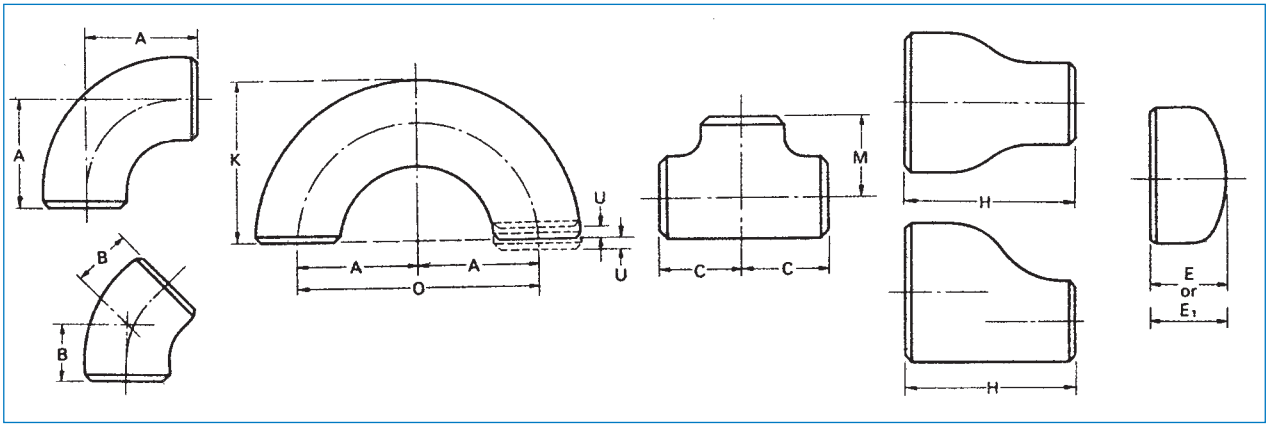

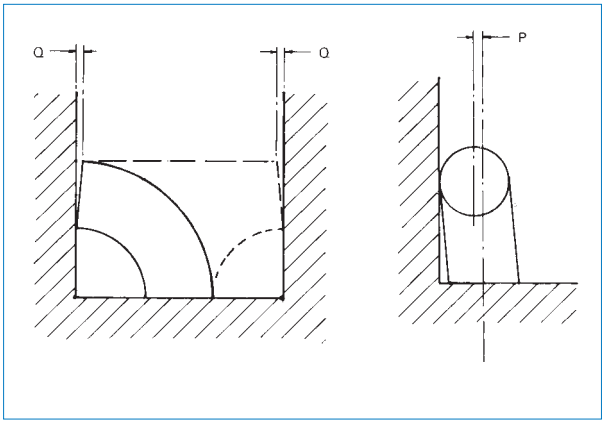

TOLERANCE (mm) FOR MSS SP–75

All Fittings													
Nominal Pipe Size		Inside Diameter at End	Wall Thick-ness	Out-of-roundness		Center-to-end Dimensions A, B, C, M			Overall Length H	Overall Length E	Angularity Off Angle Q	Elbows Off Plane P	Reducers Off Plane P
				At ends of fittings		Throughout Body of Elbows	Tees & 1.5R elbows	3R elbows	Reducers	Caps			
				Elbows	Other								
16 to 24		± 2.3	- 0.3	4.8	3.1	2.5%	± 2.3	± 3.1	± 2.3	± 6.4	1.6	6.4	2.5%
26 to 36		± 2.3	- 0.3	Note 5	3.1	2.5%	± 3.1	± 6.4	± 4.8	± 9.7	2.3	12.7	2.5%
38 to 48		± 3.1	- 0.3	Note 5	3.1	2.5%	± 4.8	± 9.7	± 9.7	± 9.7	3.1	19.1	2.5%

NOTE: [1] The inside diameter at end shall be determined by circumferential measurements, and the tolerace refers to variations from nominal I.D. calculations by (OD nom - [2]nom).
[2] Out-of-roundness tolerances shall be the difference between the maximum and minimum diameters measured on any radial cross-section.
[3] Minus 0.3 mm except that isolated non-continuous reduction are permitted in accordance with subsection 13.2.1 Excess thickness whether on inside or outside is to be treated in accordance with sketch given in Figure 3.
[4] When elbows are intended for field segmenting, out-of-roundness tolerance may be furnished to 1% by agreement between the manufacturer and the purchaser. It is recognized that extra thickness, if any, may be on the I.D.
[5] Out-of-roundness toleraces at ends shall be 1% of diameter for NPS 26 and larger.
[6] Percent of O.D.

NOTE: Outside diameter may be tapered at angle to 30° beyond weld bevel.

TOLERANCES - ASME B16.9/B16.28

All Fittings				90-Deg and 45-Deg Elbows and Tees	Reducers and Lap-Joint Stub Ends	Caps	180-Deg Returns			Lap-Joint Ends	
Nominal Pipe Size (inch)	Outside* Diameter at Bevel (1), (2)	Inside Diameter at End (1), (3), (4)	Wall Thick-ness (3)	Centre-to End Dimension A, B, C, M	Overall Length F, H	Overall Length E	Centre-to-Centre Dimension O	Back-to-Face Dimension K	Alignment of Ends U	Outside Diameter of Lap G	Fillet Radius of Lap R
1/2 - 2 ½	+1.6 -0.8	±0.8		±2	±2	±3	±6	±6	±1	+0 -1	+0 -1
3 - 3 1/2	±1.6	±1.6	Not less than 87.5% of nominal thick-ness	±2	±2	±3	±6	±6	±1	+0 -1	+0 -1
4	±1.6	±1.6		±2	±2	±3	±6	±6	±1	+0 -1	+0 -2
5 - 8	+2.4 -1.6	±1.6		±2	±2	±6	±6	±6	±1	+0 -1	+0 -2
10 - 18	+4.0 -3.2	±3.2		±2	±2	±6	±10	±6	±2	+0 -2	+0 -2
20 - 24	+6.4 -4.8	±4.8		±2	±2	±6	±10	±6	±2	+0 -2	+0 -2
26 - 30	+6.4 -4.8	±4.8		±3	±5	±10	-	-	-	-	-
32 - 48	+6.4 -4.8	±4.8		±5	±5	±10	-	-	-	-	-

NOTE: [1] Out-of-round is the sum of absolute values of plus and minus tolerance.
[2] This tolerance may be exceeded in localized areas of formed fittings where increased wall thicknss is required to meet design requirements of para. 2.2.
[3] The inside diameter and the nominal wall thichknesses at ends are to be specified by the purchaser.
[4] Unless otherwise specified by the purchaser, these tolerances apply to the nominal inside diameter, which equals the difference between the nominal outside and twice the nominal wall thickness.

Nominal Pipe Size (inch)	Angularity Tol.	
	Off Angle Q (mm)	Off Plane P (mm)
1/2 - 4	1	2
5 - 8	2	4
10 - 12	3	5
14 - 16	3	6
18 - 24	4	10
26 - 30	5	10
32 - 42	5	13
44 - 48	5	19

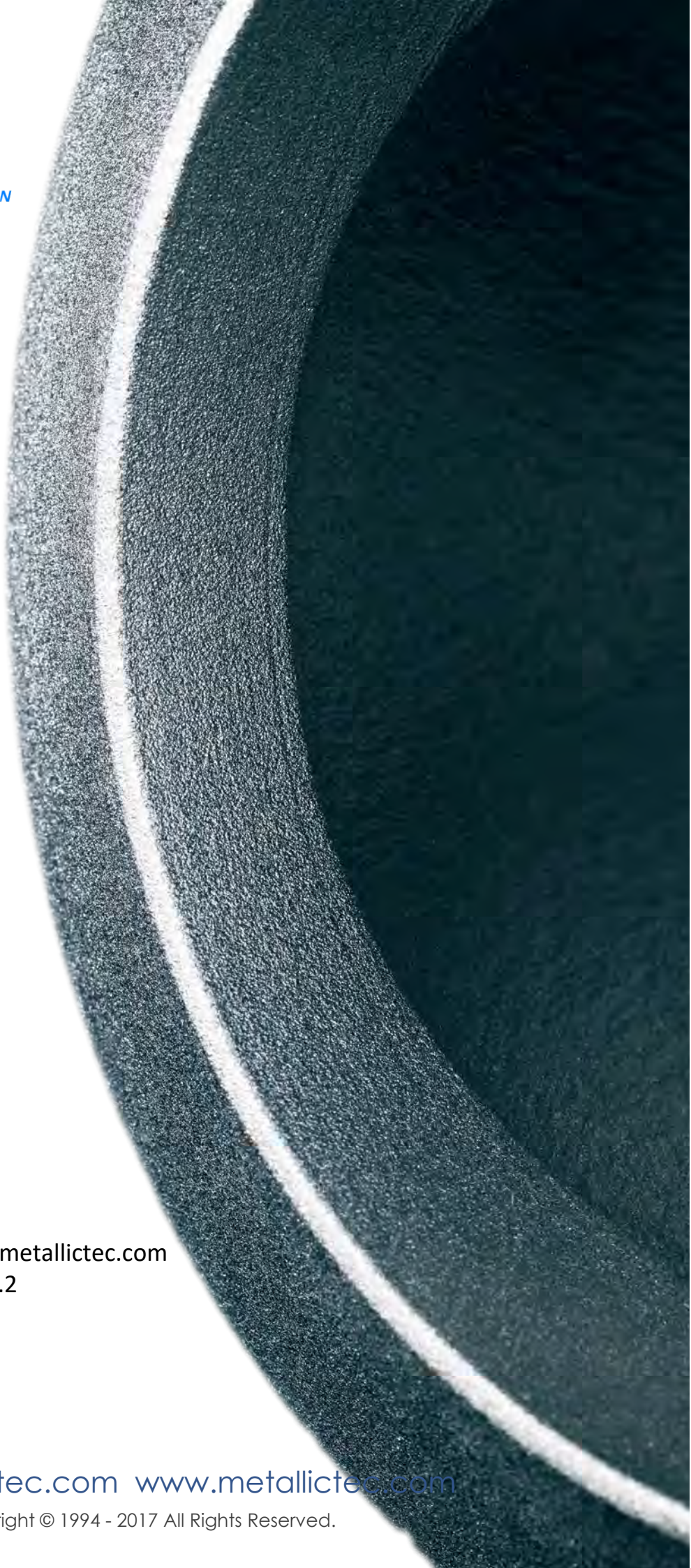

HEAD QUARTER:

PHONE:+86-21 3126 2693
FAX:+86-21 3126 2693
Email:sales@pipestec.com,sales@metallictec.com
Address:No.888, Huanhu West No.2
Road,Nanhui,Pudong,
Shanghai,China,201306

www.pipestec.com www.metallictec.com

Copyright © 1994 - 2017 All Rights Reserved.